Garage & Shelter Series

Garage-in-a-Box® SUV/TRUCK
13 x 20 x 12 ft. / 3,9 x 6,1 x 3,7 m

NEW!



INCLUDES

BONUS
Roll-Up Door Kit

Introducing our largest Garage-in-a-Box yet! 40% of vehicles on the road today are SUVs or full size trucks. We built this garage just for them with a full 8' / 2,4 m of door clearance!



REINFORCED ROOF RAFTER DESIGN
Bigger, stronger Alpine frame with reinforced roof structure adds more volume and overall strength.



EASY SLIDE CROSS RAIL
Best in class feature for continuous cover tightening. Bolt together brackets allow easy access to pressure points for optimal performance.



ADVANCED ENGINEERED FABRIC
Our covers are triple layer woven polyethylene that is ripstop tough. UV treated inside, outside and in between with added fade blockers, anti-aging, anti-fungal, and anti-yellowing agents.



PATENT PENDING ALPINE DESIGN FRAME
Bolt-together hardware at every frame connection make this GIB easier to assemble and ultra sturdy.



RATCHET-TITE COVER TENSIONING
Ensures a drum tight cover and door panel connection to shelter frame. Quality ratchet and web strap components keep cover tight and neat looking.



Great For: Most SUVs or full-size trucks up to 20' in length.

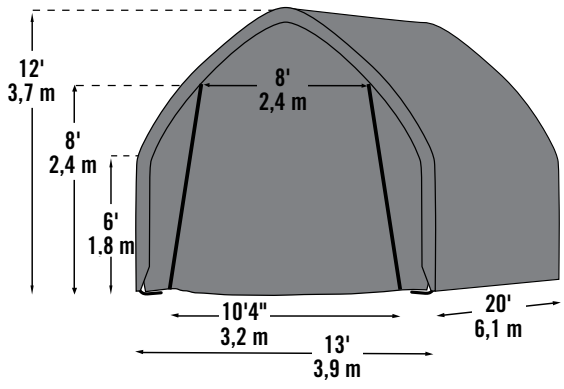

ShelterLogic®

We've Got You Covered.™
North America's #1 Shelter Manufacturer.

Model #62693

Package Includes:
- (1) 13 x 20 x 12 ft. 3,9 x 6,1 x 3,6 m garage with 1-5/8 in. / 42 mm diameter frame
- (1) Double Zippered Front Door Panel
- (1) Solid Rear Door Panel
- (1) Cover
- (1) Roll-up door kit
- (6) 15 in. / 38,1 cm auger anchors
- (8) Steel Foot Plates
- (8) Rachet Tite™ rachets
- (1) Set of step-by-step instructions

Packaging Specifications:
- Container Qty: 152 (40 ft.)
- Total Weight per unit: 290 lbs. / 131,6 kg
- Box Dimensions: 51.0 x 21.7 x 16.3 in. 129.5 x 55 x 41.5 cm

6 77599 62693 7

© 2010 ShelterLogic, LLC • 150 Callender Road • Watertown, CT 06795 • 800.932.9344 • www.shelterlogic.com
Garage-in-a-Box® is a registered trademark of ShelterLogic® LLC.

Rev. 10/10