Before you order our kit or begin construction, obtain a building permit. If additional documents are required contact Richard@barnkits.com.

GREENBRIAR ELEVATION

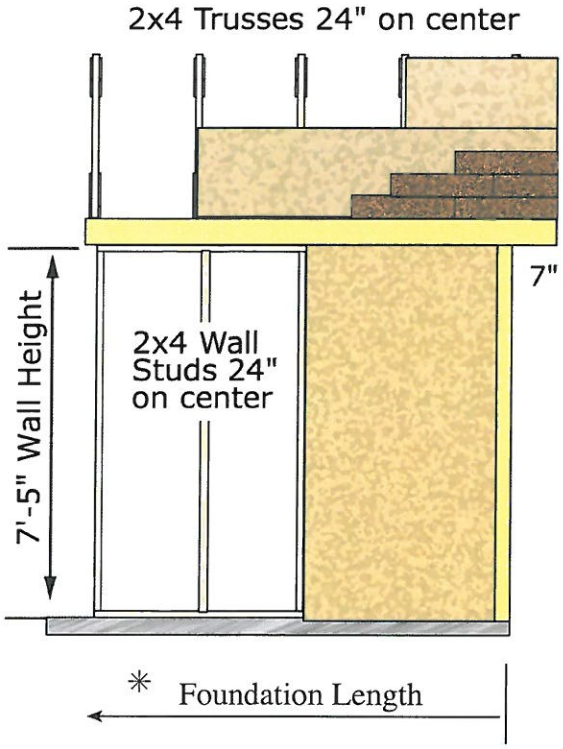

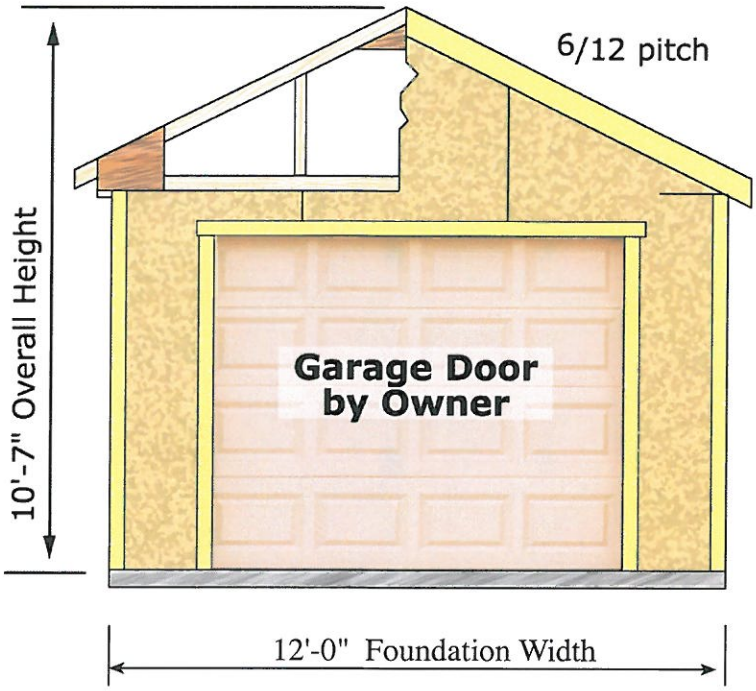

Foundation: By owner

Wall Framing: Wall studs spaced 24" o.c., designed to meet the international building codes of BOCA, IBC-IRC-2006 Edition. Walls furnished with treated bottom plate.

Siding: 7/16" OSB (0riented Strand Board). Vinyl siding by others.

Roof System: 2x4 trusses spaced 24" on center, (40 psf ground snow load, 90 mph wind load). 7/16" OSB roof sheathing. *Shingles by owner.*

Exterior Trim: White pine door jamb, trim for door opening, gable trim and sidewall fascia.

Garage Door: By Owner.

Hardware: Nails for framing, metal hurricane hangers for trusses.

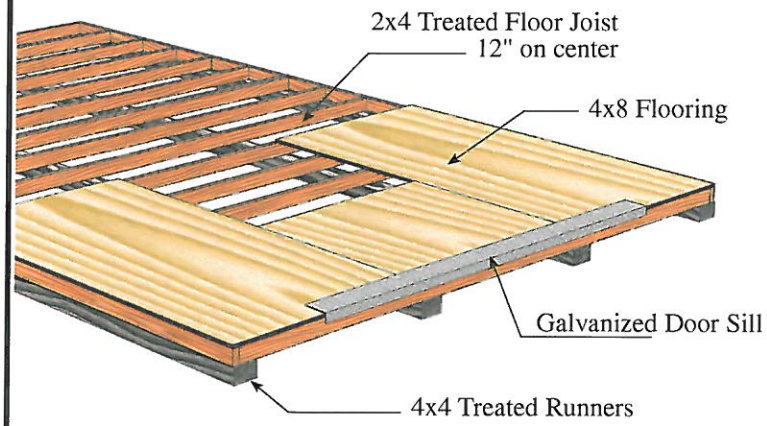

Optional Sturdy-built Floor System:

2x4 treated floor joist spaced 12" on center covered with 3/4" plywood, *not treated*, installed over 4x4 treated runners. Galvanized door sill and nails are included. Material is not pre-cut.

✳ 12'x16' Foundation Size	12'-0" x 16'-0"
12'x20' Foundation Size	12'-0" x 20'-0"
12'x24' Foundation Size	12'-0" x 24'-0"

division of Reynolds Building Systems, Inc. 205 Arlington Drive, Greenville, PA 16125

12300 Ford Rd
Suite 110
Dallas, TX, 75234
1-800-521-3245
fax 972-888-9966

www.eaglemetal.com

To Whom It May Concern:

The attached truss design drawings referenced below have been prepared by me or under my direct supervision based on the design parameters provided by **Reynolds Building Systems** and are assumed to be in accordance with the appropriate building code.

Any changes to these parameters and/or information provided on the original truss drawing voids the affected sealed truss drawing and new information shall be submitted to this office for additional review.

Listed below are the truss designs included in this package and covered by this seal.
Job Name: **RBS JRENAOLD R14C WA 1.pdf** - 1008223
R14R

Please refer to individual truss designs for specific loading and design criteria.

11/05/2009

ARTURO A. HERNANDEZ
STATE OF WASHINGTON
42169
REGISTERED
PROFESSIONAL ENGINEER
EXPIRES 11/07/2010

Arturo A. Hernandez
(WA, 42169)

My license renewal date for the state of WA is 11-07-2010

The seal on these drawings indicates acceptance of professional engineering responsibility solely for the truss components shown. It is the responsibility of the building designer as to the suitability for use of each truss listed above.

TrucBuild® Software v4.06
by Keymark Enterprises, LLC.

Truss: R14C
JobName: JRENOLDS
Date: 10/07/09 11:27 AM
Page: 1 of 1

SPAN	PITCH	QTY	OHL	OHR	CANT L	CANT R	PLYS	SPACING	WGT/PLY
7-4-12	5.921 /12	1	2-3-10	2-3-10	0-0-0	0-0-0	1	24 in	23 lbs

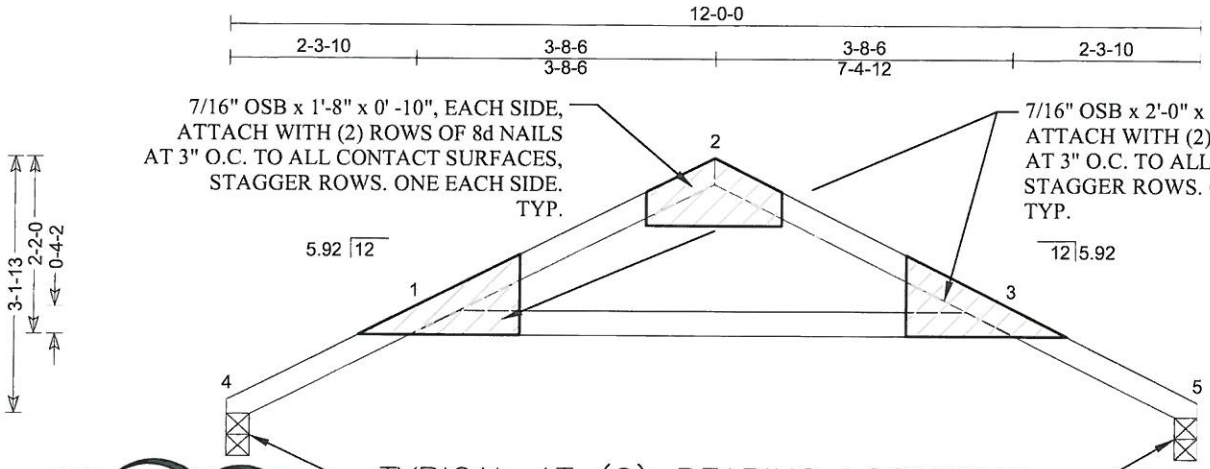

TYPICAL AT (2) BEARING LOCATIONS:
** PROVIDE CONNECTION TO RESIST THE FOLLOWING LOADS AND FORCES:
VERTICAL REACTION – 700 lb
VERTICAL UPLIFT – 450 lb
HORIZONTAL THRUST – 1200 lb

IF TRUSSES ARE PLACED AT 16" O.C., THE SNOW LOAD CAN B E INCREASED TO 60 PSF. IF TRUSSES ARE PLACED AT 12" O.C., THE SNOW LOAD CAN BE INCREASED TO 90 PSF.

11/05/2009

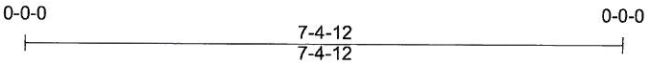

ARTURO A. HERNANDEZ
STATE OF WASHINGTON
42169
REGISTERED
PROFESSIONAL ENGINEER
EXPIRES 11/07/2010

Loading		General		CSI Summary	Deflection		L/	(loc)	Al
Load	(psf)	Bldg Code :	IBC 2003/ TPI 1-2002	TC : 0.87 (1-2)	Vert TL:	0.21 in	L / 663	(3-1)	L /
TCLL :	40	Rep Mbr Increase	No	BC : 0.60 (3-1)	Vert LL:	0.02 in	L / 999	(3-1)	L /
TCDL :	7	D.O.L. :	115 %	Web : 0.00 (1)	Horz TL:	0 in			
BCLL :	0								
BCDL :	10								

Reaction Summary

JT	Type	Brg Combo	Brg Width	Rqd Brg Width	Max React	Max Grav Uplift	Max MWFRS Uplift	Max C&C Uplift	Max Uplift	Max Horz
4	Pin (Wall)	1	3.313 in	1.50 in	698 lbs	·	-147 lbs	-441 lbs	-441 lbs	
5	Pin (Wall)	1	3.313 in	1.50 in	698 lbs	·	-147 lbs	-441 lbs	-441 lbs	668

Material Summary

TC SPF #2 2 x 4
BC SPF #2 2 x 4
Webs

Bracing Summary

TC Bracing: Sheathed or Purlins at 3-5-0, Purlin design by Others.
BC Bracing: Sheathed or Purlins at 5-4-0, Purlin design by Others.

Loads Summary

1) This truss has been designed for the effects of wind loads in accordance with ASCE7 - 02 with the following user defined input: 90 mph, Exposure C, Enclosed, Gable/Hip, Building Category II (I = 1.00), h=B=L=15 ft, End Zone Truss, Both end webs considered. DOL = 1.60
2) This truss has been designed for the effects of balanced and unbalanced snow loads for hips/gables in accordance with ASCE7 - 02 except as noted, with the following user defined input: 40 psf ground snow load. NOTE: Conservatively, all flat/sloped roof factors have been ignored and the ground snow load has been used for the roof snow load, DOL = 1.15. If the roof configuration differs from hip/gable, Building Designer shall verify snow loads.
3) This truss has been designed to account for the effects of ice dams forming at the eaves.
4) This truss has been designed for the effects of a 18.1 psf live load computed in accordance with IBC 2003 assuming slope = 5.92 /12 and area supported = 24 ft².
5) Minimum storage attic loading has been applied in accordance with IBC 1607.1

Member Forces Summary

Table indicates: Member ID, max CSI, max axial force, (max compr. force if different from max axial force)

TC	4-1	0.847	-1,340 lbs	1-2	0.868	-869 lbs	2-3	0.868	-869 lbs	3-5	0.847	-1,340 lbs
BC	3-1	0.596	-1,171 lbs									
Webs												

Notes:

6) When this truss has been chosen for quality assurance inspection, the Effective Tooth Count Method per TPI 1-2002/A3.4 shall be used.
7) Brace bottom chord with approved sheathing.
8) Multiple pinned bearings exist.

UNIQUE BEARING CONDITIONS AT JOINTS 4 & 5 REQUIRE SPECIAL ATTENTION
THE BUILDING DESIGNER MUST ACCOUNT FOR NOT ONLY THE BEARING REACTION BUT FOR THE HORIZONTAL THRUST AND THE UPLIFT. PROVIDE MECHANICAL CONNECTION (BY OTHERS) TO RESIST SAID FORCES SHOWN HEREON. THRUST = 1180lb/TRUSS

A copy of this design shall be furnished to the erection contractor. This design is for an individual building component (a truss). It is based on specifications provided by the Truss Designer and performed in accordance with TPI-1-2002 and the 2001 NDS design standard. No responsibility is assumed for the accuracy of information provided by the Truss Designer. Dimensions shall be verified by building designer. Creep deflection is not automatically accounted for by the software. The building designer shall review loading, truss configuration and initial deflection data shown to ensure that this design meets or exceeds minimum loading required by applicable building codes. Compression chords shall be laterally braced by the roof or floor sheathing, directly attached, unless otherwise noted. Bracing shown is for lateral support of individual truss components only to reduce buckling length. It is not wind or lateral load bracing or overall building design bracing which is by others. Refer to BCSI-B recommended truss handling and erection. Do not apply loads beyond weight of erectors until all permanent bracing is in place. Concentration of construction loads greater than the design loads shall not be applied to the trusses at any time. Trusses sh be handled with care prior to erection to avoid damage. Lumber moisture content shall be 19% or less at the time of fabrication, unless noted otherwise (U.N.O.). Connector plates shall be manufactured by Eagle Metal Products (ESR-1082). Plates shall be applied on both faces of truss at each joint. Plate dimensions are listed width x length. Slots (holes) in plate shall run parallel to the plate length. The plate shall be centered on joint and/or placed in accordance with the current version of TPI assumes adequate anchorage will be provided to resist uplift at supports. The seal on this drawing indicates acceptance of professional engineering responsibility solely for the truss component design shown. The suitability and use of this component for any particular building design is the responsibility of the building designer, per ANSI/TPI 1-2002 Chapter 2.

Eagle Metal Products
2711 LBJ Freeway, Suite 160
Dallas, Texas 75234