DURAMAX™ A Product of USP US POLYMERS INC

ALL PURPOSE POLY STORAGE SHEDS

Greenhouse

OWNER'S MANUAL / Instructions for Assembly

Size 8' x 6'

Ver: 1.0

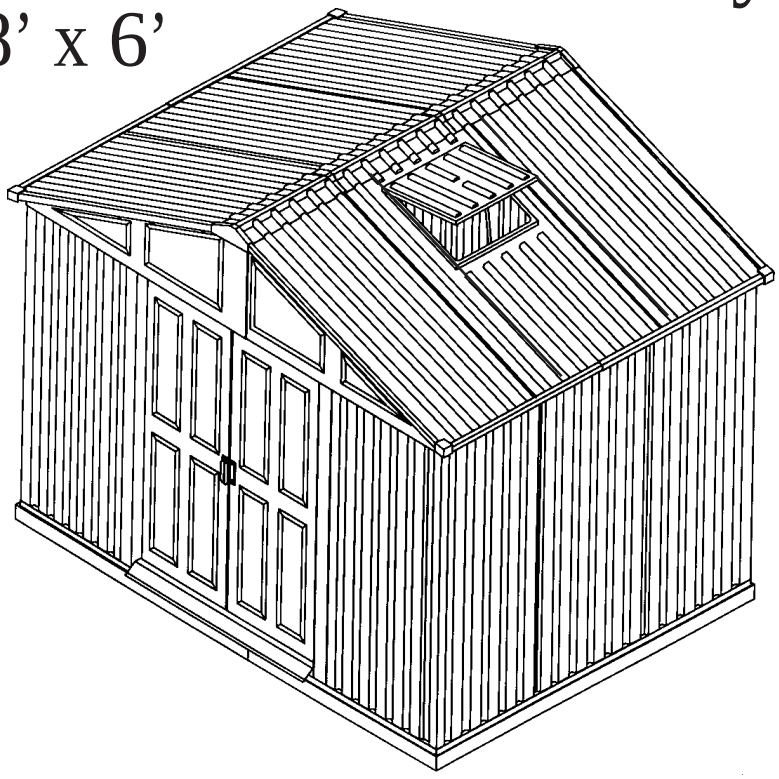

Customer Service Hotline
(800) 483-4674
www.uspolymersinc.com

Requires two people and takes 2-3 hours for Installation.

- Tall Walk in Shed
- Quick & Easy Assembly
- Ridge Reinforced Walls
- Wide Double Doors
- Available in Various Sizes

Call us for any missing or damaged parts.
Do not return to the store.

Duramax Storage Shed
Limited Ten Year Warranty

U.S. Polymer Inc. will send a replacement part free of charge, in the event of material defects and or workmanship for a period of ten years from the date of purchase.

This warranty is extended only to the original purchaser. A purchase receipt or other proof of date of original purchase will be required before warranty service is rendered. In no event shall we pay the cost of flooring, labor, installation or any other costs related thereto.

This warranty only covers failures due to defects in material or workmanship which occurs during normal use and does not extend to color change arising due to normal weathering or to damage resulting from misuse or neglect, commercial use, failure to follow assembly instructions and the owner's manual (including proper anchoring of the shed), painting, forces of nature and other causes which is beyond our control.

Claims under this warranty must be made within the warranty period by calling 1-800-483-4674 or mail in a dated sales slip and clear photograph of the part to:

U.S. Polymers, Inc.
6915 Slauson Avenue
Commerce, CA 90040

We reserve the right to discontinue or change components. If a component has been discontinued or is not available,
U.S. Polymers, Inc. reserves the right to substitute a component of equal quality as may be compatible.

Limits and Exclusions

There are no express warranties except as listed above. The warrantor shall not be liable for incidental or consequential damages resulting from the use of this product, or arising out of any breach of this warranty. All express warranties are limited to the warranty period set forth above . Some states do not allow the exclusion or limitation on how long an implied warranty lasts, so the above limitations may not apply to you.

This warranty gives you specific legal rights and you may also have other rights which vary from state to state or country to country.

IMPORTANT: USE HAND GLOVES TO PREVENT INJURY.

Parts List

Note: Check all parts prior to installation.

CODE	DESCRIPTION	QTY
FC1BP	FOUNDATION 'U'CHANNEL	2
FC2BP	FOUNDATION 'U'CHANNEL	2
FC3BP	FOUNDATION 'U'CHANNEL	2
FCCP	FOUNDATION 'U'CHANNEL	4
BLBP	BASE BAR BACK LEFT	1
BRBP	BASE BAR BACK RIGHT	1
BSBP	BASE BAR SIDE	2
BBFP	BASE BAR FRONT	2
ECBP	ENTRANCE TAPER CHANNEL	1
COLP	COLUMN LONG	13
COSP	COLUMN SHORT	2
DCLP	DOOR COLUMN PROFILE LEFT	1
DCRP	DOOR COLUMN PROFILE RIGHT	1
CS	COLUMN SUPPORT	4
CB1P	CENTER BAND FRONT	2
CB2P	CENTER BAND SIDE FRONT	2
CB3P	CENTER BAND SIDE FRONT	2
CB4P	CENTER BAND MIDDLE	6
SLBP	SLIDING CHANNEL LEFT	1
SRBP	SLIDING CHANNEL RIGHT	1
SJP	SLIDING CHANNEL JOINT	1
SCBP	SLIDING CHANNEL COVER	1
ASBP	TOP ANGLE SIDE LEFT/RIGHT	2
ABLBP	TOP ANGLE BACK LEFT	1
ABRBP	TOP ANGLE BACK RIGHT	1
SB1BP	SUPPORT BRACKET FRONT RIGHT/BACK LEFT	2
SB2BP	SUPPORT BRACKET FRONT LEFT/BACK RIGHT	2
SB3BP	SUPPORT BRACKET LONG FRONT RIGHT/BACK LEFT	2
SB4BP	SUPPORT BRACKET LONG FRONT LEFT/BACK RIGHT	2
FBS	FACIA BRACKET SUPPORT	8
FSLBP	FACIA SUPPORT LEFT	2
FSRBP	FACIA SUPPORT RIGHT	2
RSBP	ROOF SUPPORT	4
RS4BP	ROOF STRUCTURE	4
RF1BP	ROOF FLASHING FRONT RIGHT/BACK LEFT	2
RF2BP	ROOF FLASHING FRONT LEFT/BACK RIGHT	2
RF3BP	ROOF FLASHING FRONT LEFT/BACK RIGHT	2
RF4BP	ROOF FLASHING FRONT RIGHT/BACK LEFT	2
DSTBP	DOOR PANEL STRIP TOP	2
DSBBP	DOOR PANEL STRIP BOTTOM	2
DMSBP	DOOR PANEL MIDDLE SUPPORT	2
DVSP	DOOR PANEL VERTICAL SUPPORT	2
DSP	DOOR STOPPER VERTICAL	2
HS	HINGES SUPPORT	1
HAS	HEIGHT ADJUSTABLE SUPPORT	1
WP1A	FRONT WALL PANEL LEFT	1
WP2A	FRONT WALL PANEL RIGHT	1
WP3A	CORNER WALL PANEL	4
WP4A	WALL PANEL	6
FLBP	FACIA PANEL LEFT	2
FRBP	FACIA PANEL RIGHT	2
RP1BP	ROOF PANEL	2
RP2BP	ROOF PANEL	1
RP3BP	ROOF PANEL	2
RP2BG	ROOF PANEL	1
RPWG	ROOF PANEL WINDOW	1
RC1P	RIDGE COVER	1
RC2P	RIDGE COVER	2
DLBP	DOOR PANEL LEFT	1
DRBP	DOOR PANEL RIGHT	1
VBCS1	VENTILATION BLOCKING COVER SIDE-1	4
VBCS2	VENTILATION BLOCKING COVER SIDE-2	2
VBCF	VENTILATION BLOCKING COVER SIDE FRONT/BACK	6

ACCESSORIES

CODE	DESCRIPTION	QTY
FCFP	FRONT COLUMN FITTING	2
CCFP	CORNER COLUMN FITTNG	4
CFP	COLUMN FITTING	15
DCBFP	DOOR COLUMN BOTTOM FITTING	2
CBFP	CENTER BAND FITTING	7
BS	BOTTOM SLIDER	4
DH	DOOR HANDLE	2
FC	RIDGE END CAP	2
TC	TOP CORNERS	4
TS	TOP SLIDER	4
PPG	ROOF PLUG WITH WASHER	50
PIN	ROOF PIN	50
PW	PLASTIC WASHERS	261
PC	PLASTIC SCREW COVER	109
WHG	HOOK	1
EDP	EDGING PROFILE	1
S1	SHEET METAL SCREW DIA. 4.2mm.x16.0mm. (5/32"x5/8")	443
S3	MACHINE SCREW with NUTS M4x10.0mm. (5/32"x3/8")	52
S7	SHEET METAL SCREW DIA. 4.2mm.x10.0mm. (5/32"x3/8")	60

PROFILES

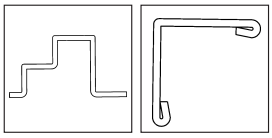
BASE BAR (BLBP, BRBP, BSBP)

TOP ANGLE BACK (ABLBP, ABRBP)

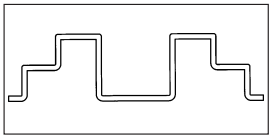
BASE BAR FRONT (BBFP)

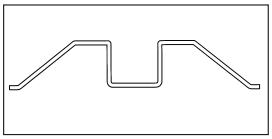
ENTRANCE TAPER CHANNEL (ECBP)

DOOR COLUMN PROFILE LEFT (DCLP)

DOOR COLUMN PROFILE RIGHT (DCRP)

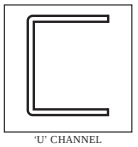
'U' CHANNEL (FC1BP, 2BP, 3BP, FCCP)

HOOK (WHG)

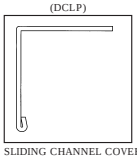
SLIDING CHANNEL COVER (SCBP)

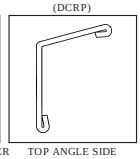
TOP ANGLE SIDE (ASBP)

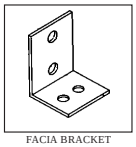
FACIA BRACKET SUPPORT (FBS)

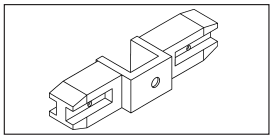
CENTER BAND FITTING (CBFP)

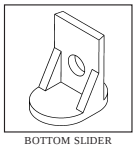
BOTTOM SLIDER (BS)

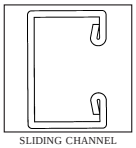
SLIDING CHANNEL (SLBP, SRBP)

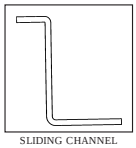
SLIDING CHANNEL SUPPORT (SJP)

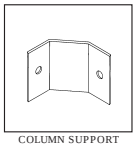
COLUMN SUPPORT (CS)

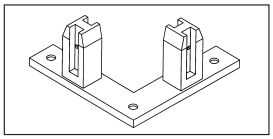
CORNER COLUMN FITTING (CCFP)

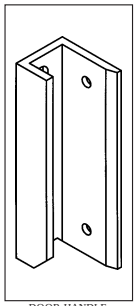
DOOR HANDLE (DH)

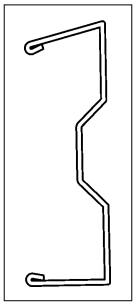
ROOF SUPPORT (RSBP)

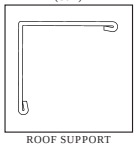
ROOF SUPPORT BRACKET (SB1AP, SB2AP)

PLASTIC SCREW COVER (PC)

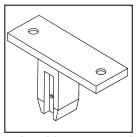
FRONT COLUMN FITTING (FCFP)

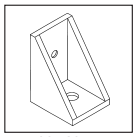
DOOR COLUMN BOTTOM FITTING (DCBFP)

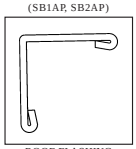
ROOF FLASHING (RF1BP, RF2BP, RF3BP, RF4BP)

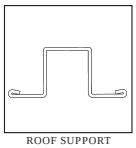
ROOF SUPPORT (RS4BP) (HAS)

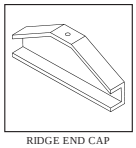
RIDGE END CAP (FC)

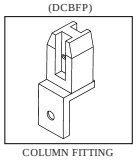
COLUMN FITTING (CFP)

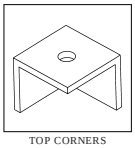
TOP CORNERS (TC)

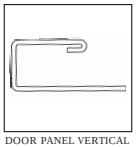
DOOR PANEL VERTICAL SUPPORT (DVSP)

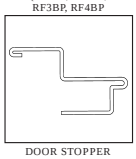
DOOR STOPPER VERTICAL (DSP)

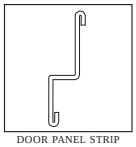
DOOR PANEL STRIP (DSTBP, DSBBP)

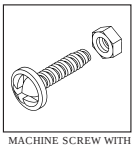
MACHINE SCREW WITH NUT (S3)

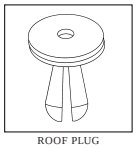
ROOF PLUG (PPG)

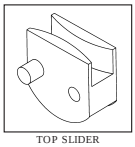
TOP SLIDER (TS)

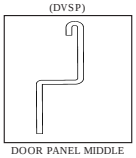
DOOR PANEL MIDDLE SUPPORT (DMSBP)

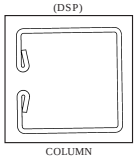
COLUMN (COLP, COSP)

SHEET METAL SCREW (S1, S7)

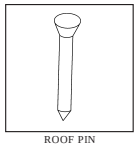
ROOF PIN (PIN)

PLASTIC WASHER (PW)

FACIA SUPPORT (FSLBP, FSRBP, SB3BP, SB4BP)

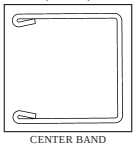
CENTER BAND (CB2P, CB3P, CB4P, HS)

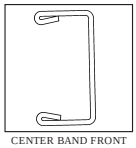
CENTER BAND FRONT (CB1P)

IMPORTANT: USE HAND GLOVES TO PREVENT INJURY.

Exploded View

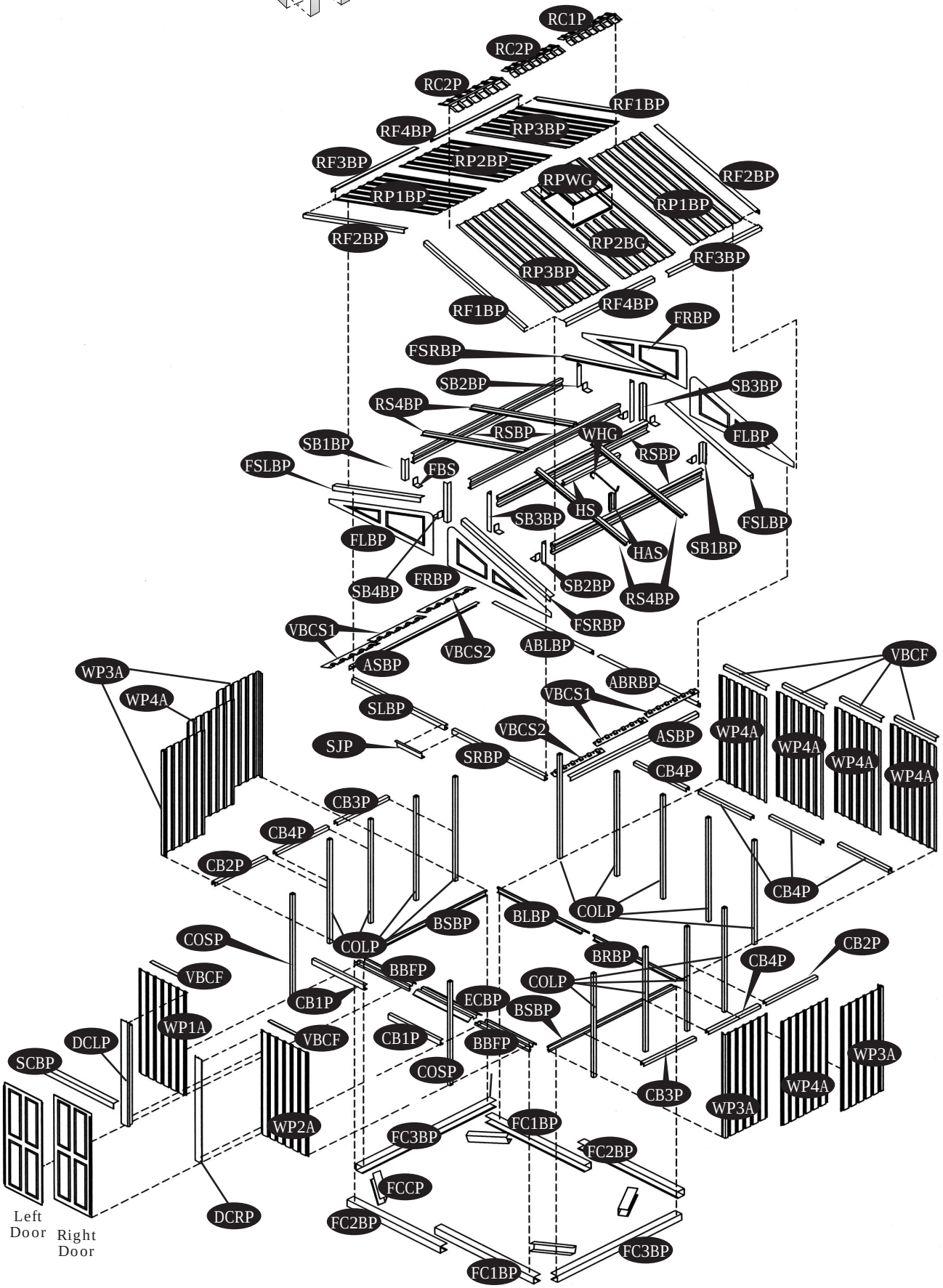

IMPORTANT: USE HAND GLOVES TO PREVENT INJURY.

A. Foundation & Base Frame

Note: It is important that these instructions are followed step by step.

Note

Before Assembling Foundation make sure that the floor level should be perfect flat.

Parts needed:

(2)	Foundation 'U' Channel	(FC1BP)
(2)	Foundation 'U' Channel	(FC2BP)
(2)	Foundation 'U' Channel	(FC3BP)
(4)	Foundation 'U' Channel	(FCCP)
(1)	Base bar back left	(BLBP)
(1)	Base bar back right	(BRBP)
(2)	Base bar side left & right	(BSBP)
(2)	Base bar front	(BBFP)
(1)	Entrance taper channel	(ECBP)
(8)	Sheet metal screws	(S7)
(56)	Sheet metal screws	(S1)

1. Assemble the channel (FC1BP) & (FC2BP) together using (S1) screws. Make 2 sets.

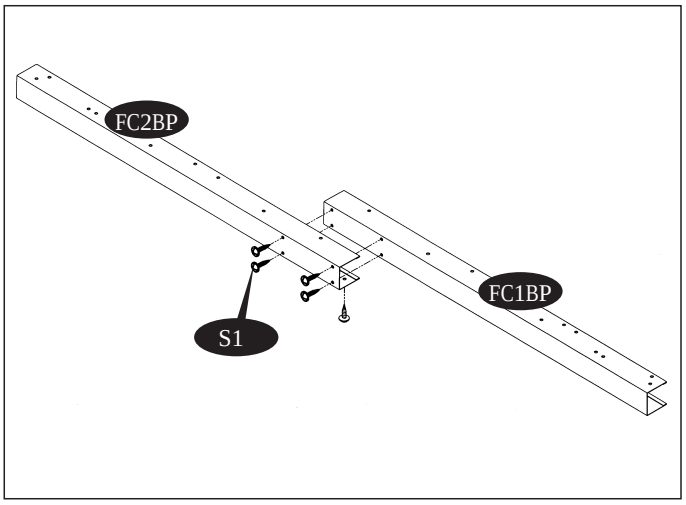

2. Make a frame with the sub assemblies as shown below.

Note

Make sure while assembling, the channel position should be as shown.

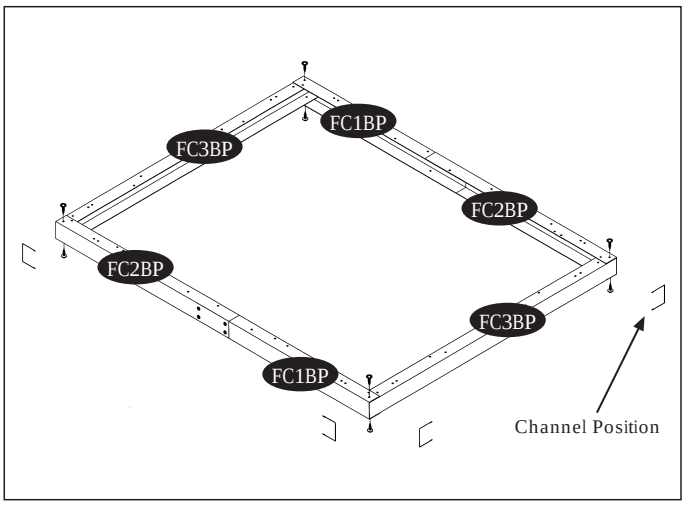

IMPORTANT: USE HAND GLOVES TO PREVENT INJURY.

3. Fix the channel (FCCP) to all the four corners to make a perfect frame. See Fig.

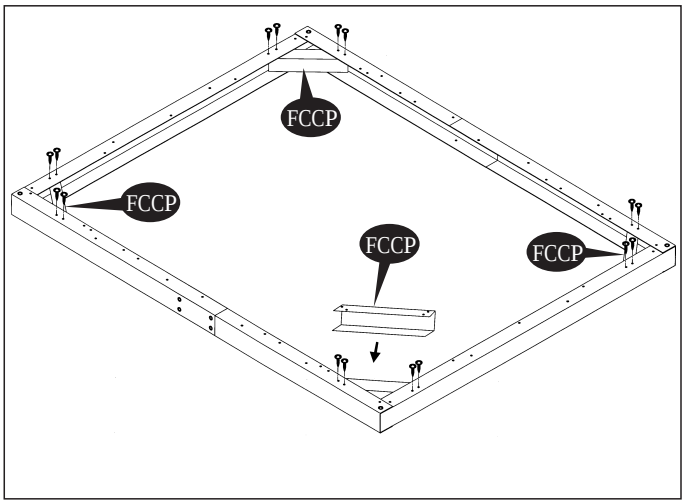

4. Assemble base bar back left (BLBP) and base bar back right (BRBP) with four (S7) screws. See fig. 1 & 2.

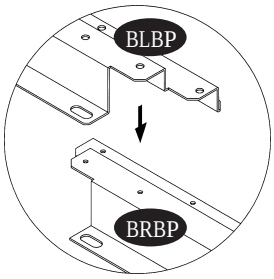

Fig.1

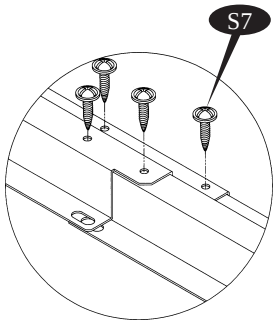

Fig.2

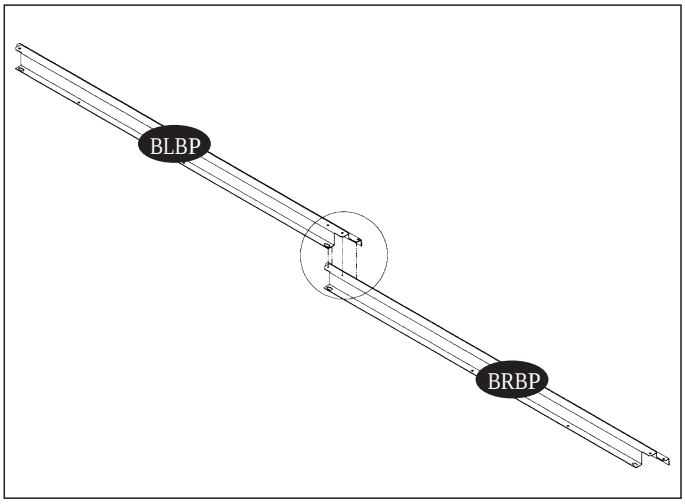

5. Place the base bar assembly on top of the foundation. Use (S1) screws to fix the assembly to foundation.

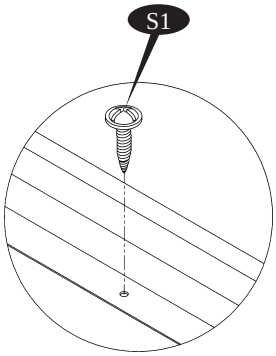

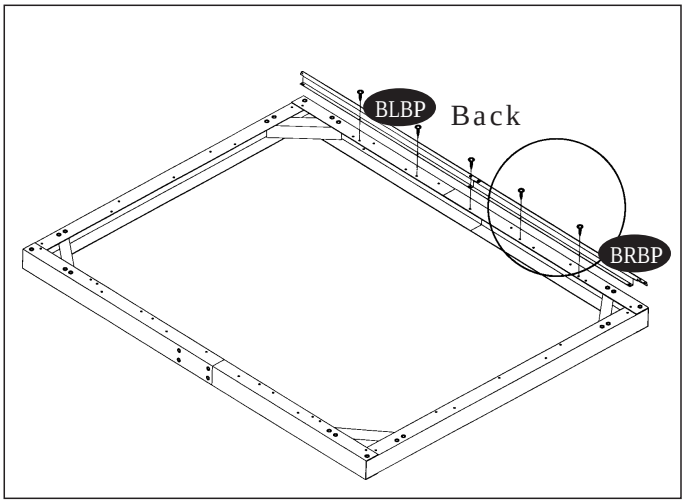

IMPORTANT: USE HAND GLOVES TO PREVENT INJURY.

6. Insert the base bar side (BSBP) into (BLBP) & (BRBP) secure with two (S7) screws on both sides. See blowup.

Step 1

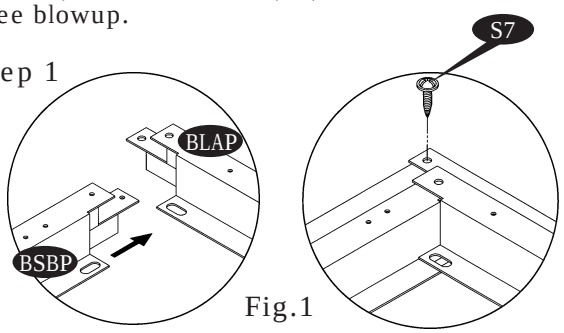

Fig.1

Step 2

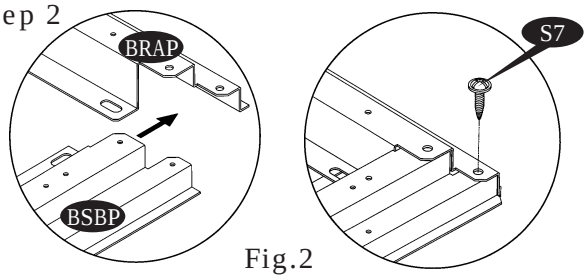

Fig.2

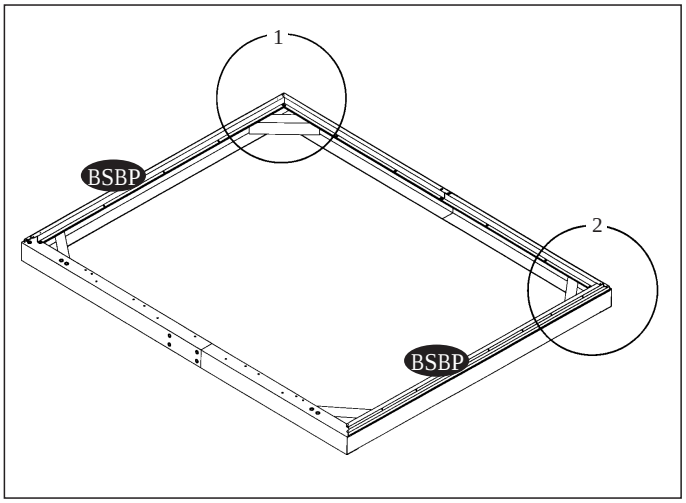

7. Line up the holes with foundation and secure with (S1) screws.

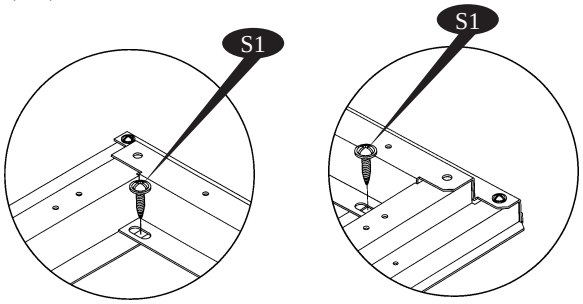

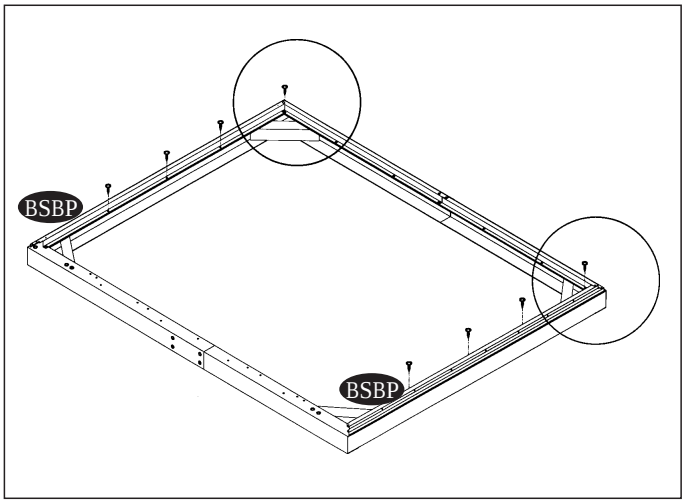

8. Place the base bar (BBFP) on top of (BSBP) on both sides. Secure with (S7) screw to (BSBP) on both corners. See fig. 1 & 2.

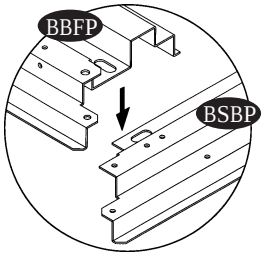

Fig.1

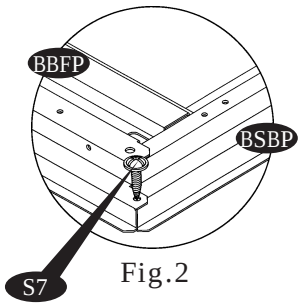

Fig.2

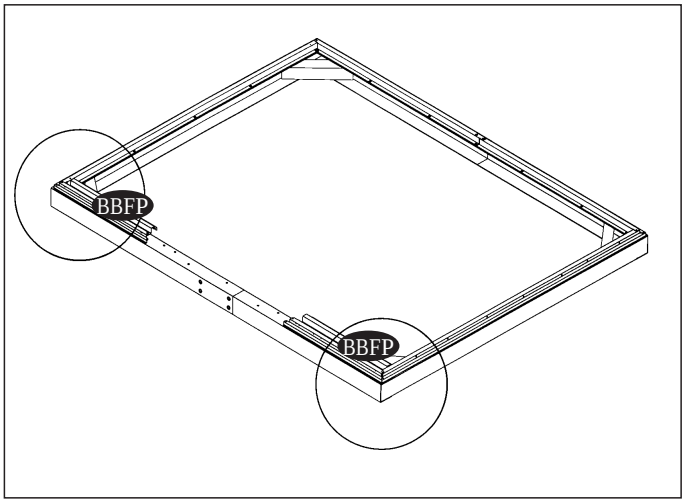

IMPORTANT: USE HAND GLOVES TO PREVENT INJURY.

9. Secure the base (BBFP) to the foundation with (S1) screws.

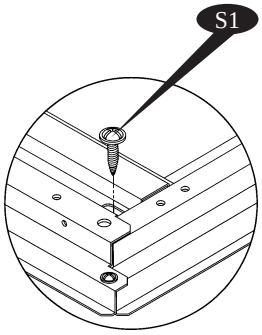

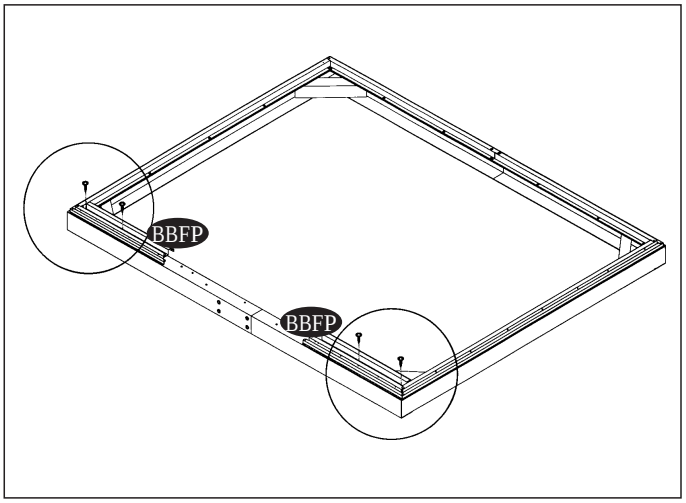

10. Place the entrance taper channel (ECBP) on top of the (BBFP). Secure with (S1) screws to the foundation. See fig. 1 & 2.

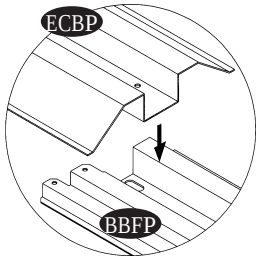

Fig.1

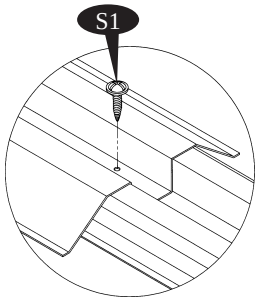

Fig.2

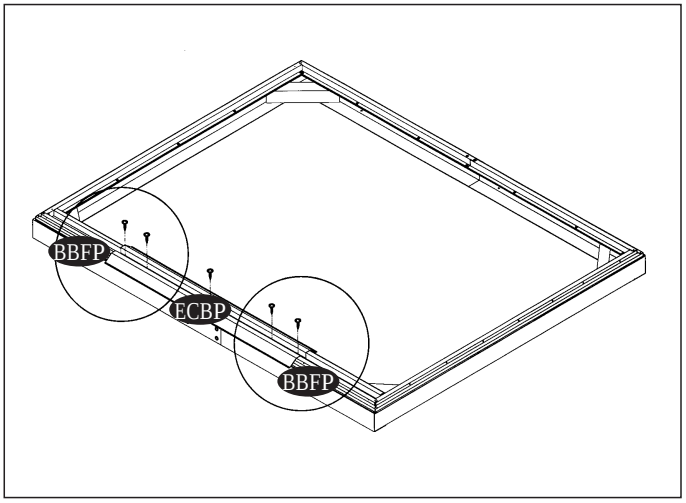

Note

After completing the assembly of the base bar fill the concrete or sand upto the foundation top suraface

B. Walls & Columns

Note

All panels are clearly marked and care should be taken to use the correct one.

Parts Needed:

(2)	Column short	(COSP)	(2)	Center band side front	(CB2P)
(13)	Column long	(COLP)	(2)	Center band side back	(CB3P)
(4)	Column support	(CS)	(6)	Center band middle	(CB4P)
(1)	Wall panel front left	(WP1A)	(1)	Door column profile left	(DCLP)
(1)	Wall panel front right	(WP2A)	(1)	Door column profile right	(DCRP)
(4)	Wall panel corner	(WP3A)	(4)	Corner column fitting	(CCFP)
(6)	Wall panel side	(WP4A)	(7)	Center band fitting	(CBFP)
(1)	Sliding channel right	(SRBP)	(2)	Front column fitting	(FCFP)
(1)	Sliding channel left	(SLBP)	(15)	Column fitting	(CFP)
(1)	Sliding channel joint	(SJP)	(2)	Door Column bottom fitting	(DCBFP)
(1)	Sliding channel cover	(SCBP)	(4)	Top slider	(TS)
(2)	Top angle side left & right	(ASBP)	(148)	Plastic washer	(PW)
(1)	Top angle back left	(ABLBP)	(6)	Vantilation Blocking Cover Front/Back	(VBCF)
(1)	Top angle back right	(ABRBP)	(248)	Sheet metal screw	(S1)
(2)	Center band front	(CB1P)	(20)	Sheet metal screw	(S7)

IMPORTANT: USE HAND GLOVES TO PREVENT INJURY.

1. Place the corner column fitting (CCFP) on top of the base bar (BBFP & BSBP). Secure with the three (S1) screws to the base bar.
Follow the same at the other corner.

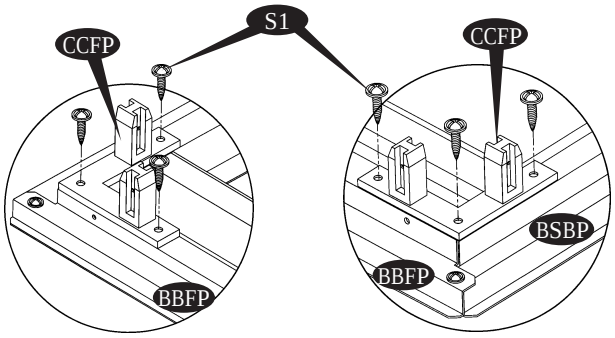

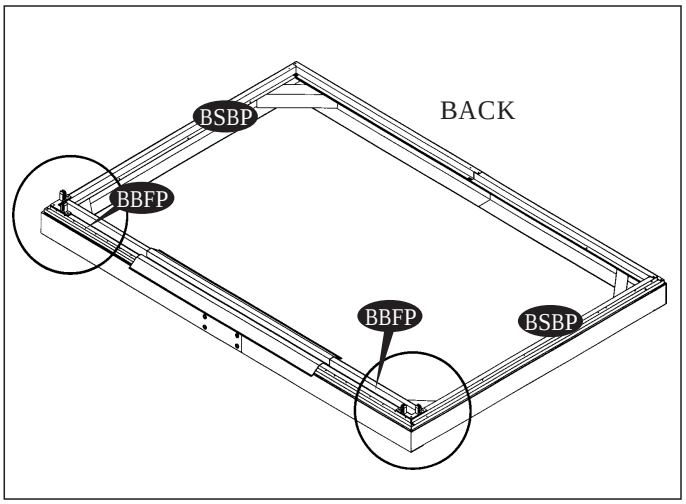

2. Insert the column (COSP) & (COLP) in to corner column fitting and secure with (S1) screws from inside. Insert the column (COSP) at the top of base (BBFP) and column (COLP) at the top of (BSBP)

Note

Make sure the direction of the column opening and arrow up as per blow up.

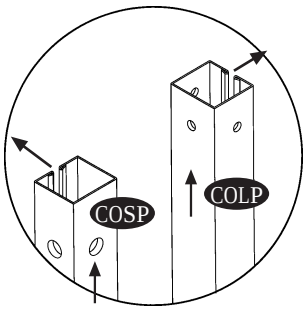

Fig.1

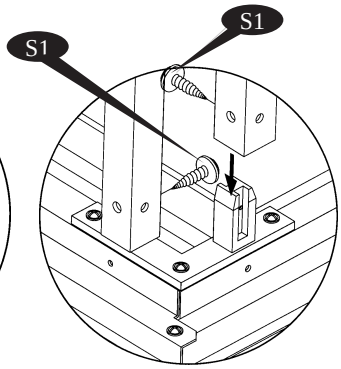

Fig.2

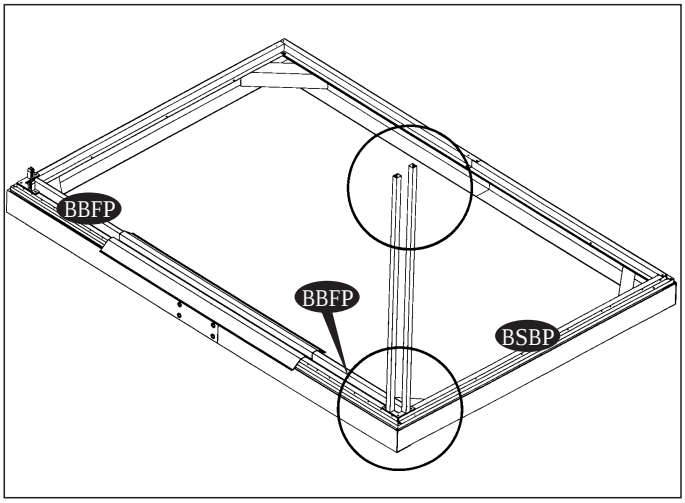

3. Fix the column support (CS) to the column with two (S1) screws.

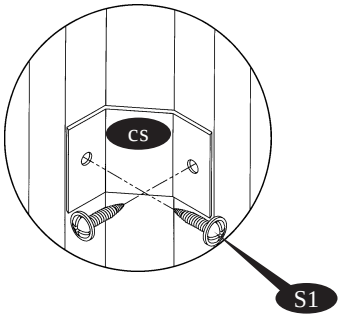

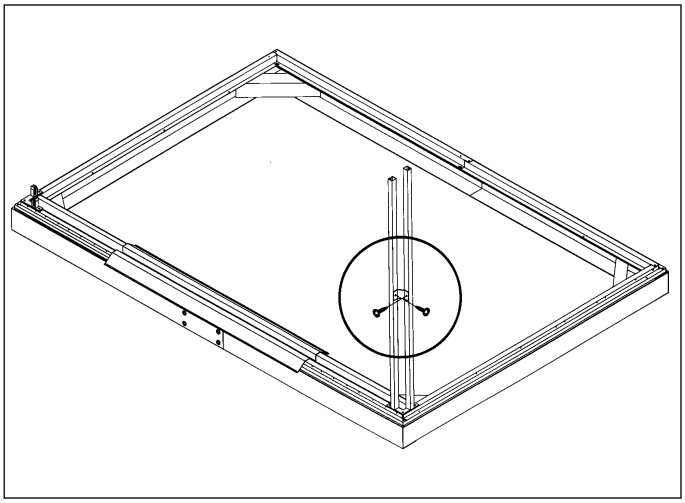

IMPORTANT: USE HAND GLOVES TO PREVENT INJURY.

4. Insert the column (COSP) & (COLP) in to corner column fitting and secure with (S1) screws from inside. Insert the column (COSP) at the top of base (BBFP) and column (COLP) at the top of (BSBP)

Note

Make sure the direction of the column opening and arrow up as per blow up.

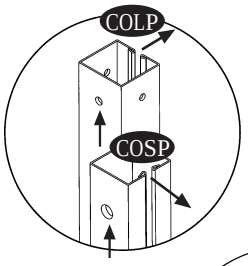

Fig.1

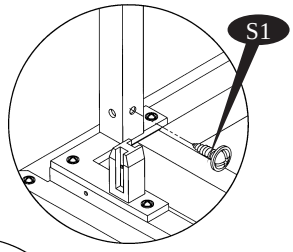

Fig.2

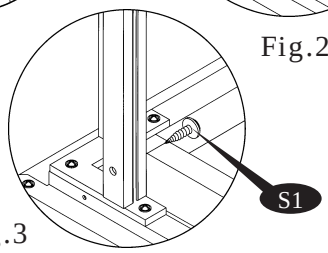

Fig.3

5. Fix the column support (CS) to the column with two (S1) screws.

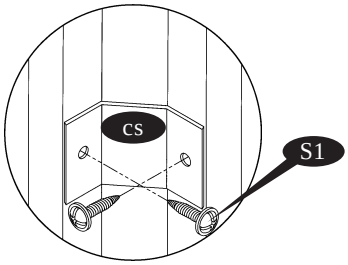

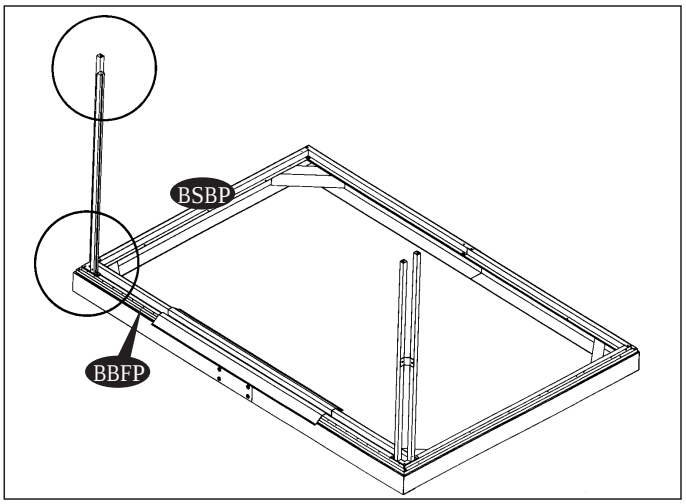

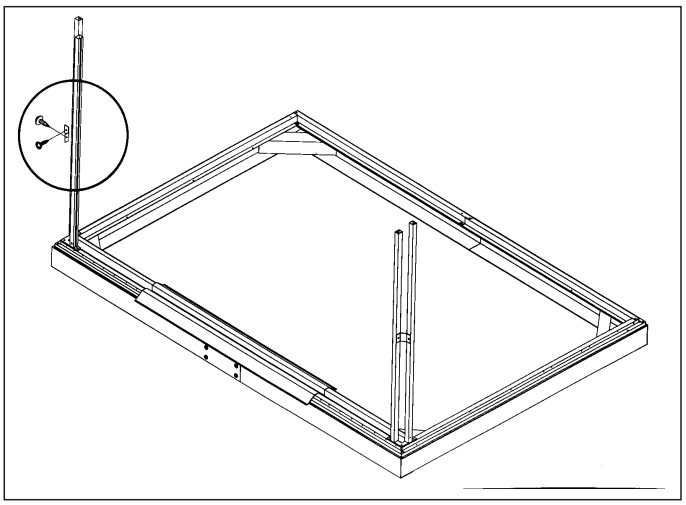

6. Assemble the sliding channel (SLBP & SRBP) together with sliding channel joint (SJP). Secure with 8 screws (S7)

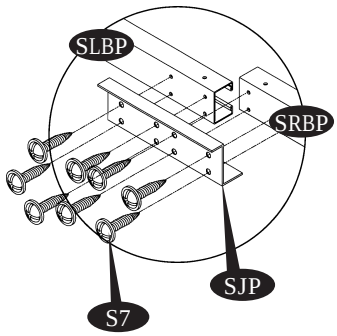

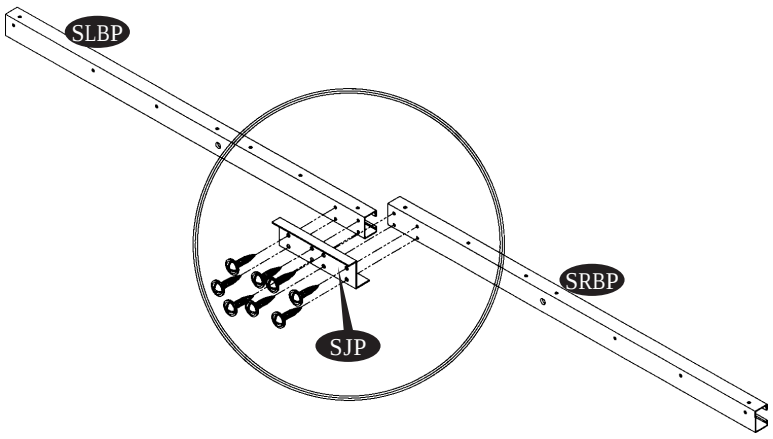

IMPORTANT: USE HAND GLOVES TO PREVENT INJURY.

7. Insert the front column fitting at the top of front column (COSP) and secure with (S1) screws from inside. Continue the same at the other side.

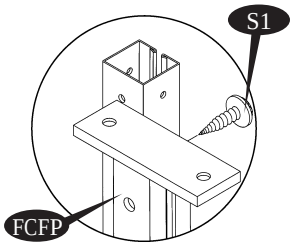

Fig.1

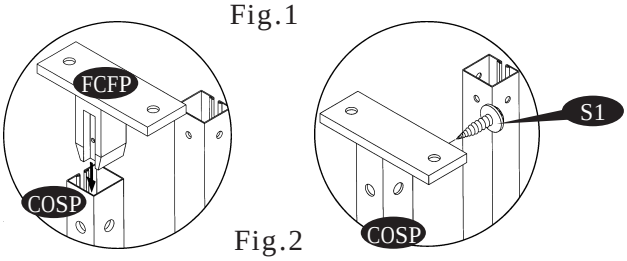

Fig.2

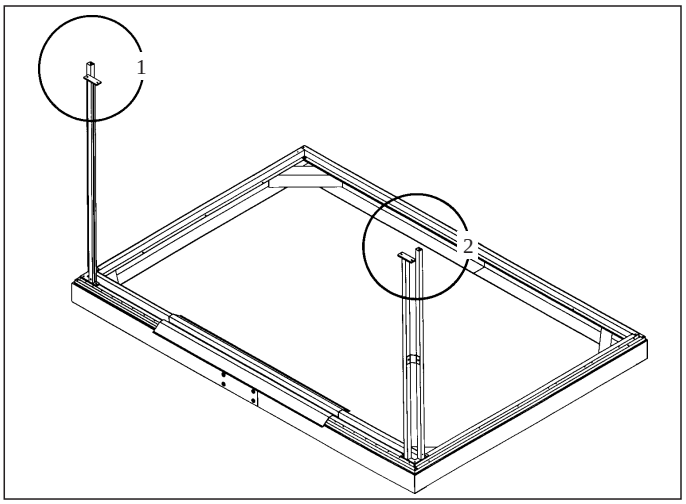

8. Place the sliding channel assembly (SLBP & SRBP) on the top of front column fitting at the both ends. Secure with (S1) screws.

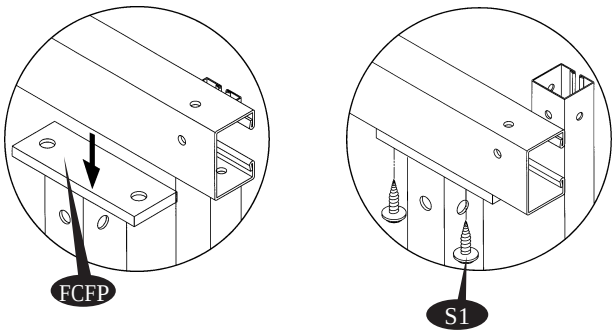

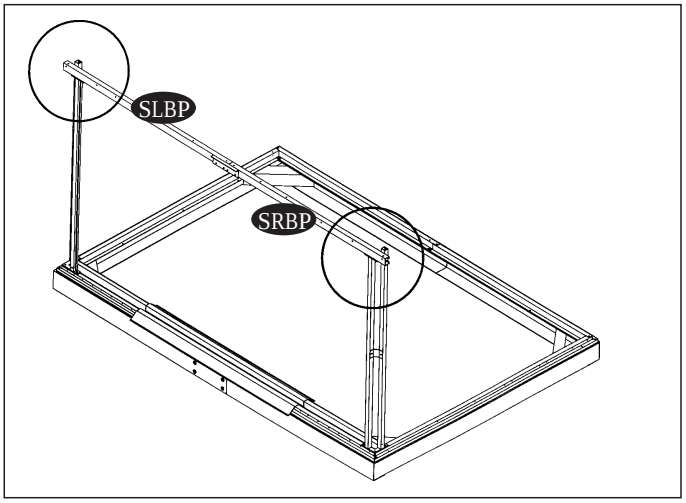

9. Insert 4 nos of top slider (TS) into the sliding channel as per the direction shown.

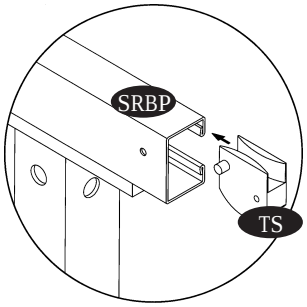

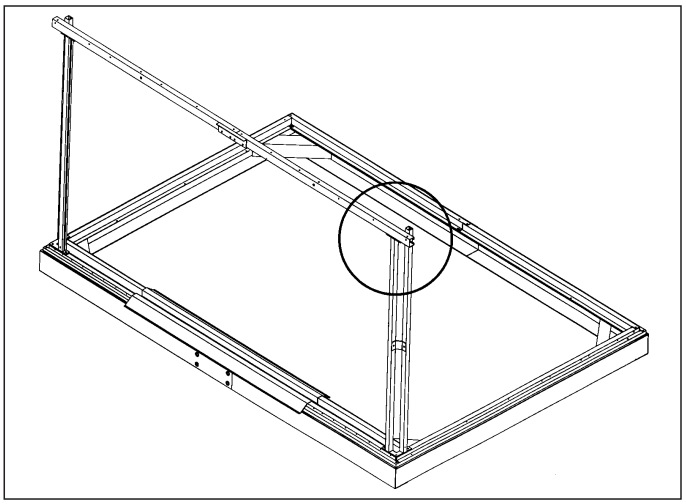

IMPORTANT: USE HAND GLOVES TO PREVENT INJURY.

10. Place the wall panel (WP3A) on the base bar (BSBP) front right side of the shed. Line up the holes with base bar.
Secure with (S1) screws with washers from out side.

Tip

First fix the middle screws then go to the edges.

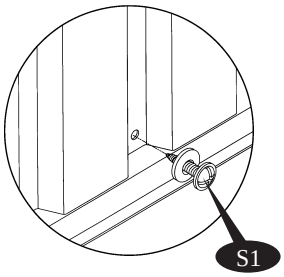

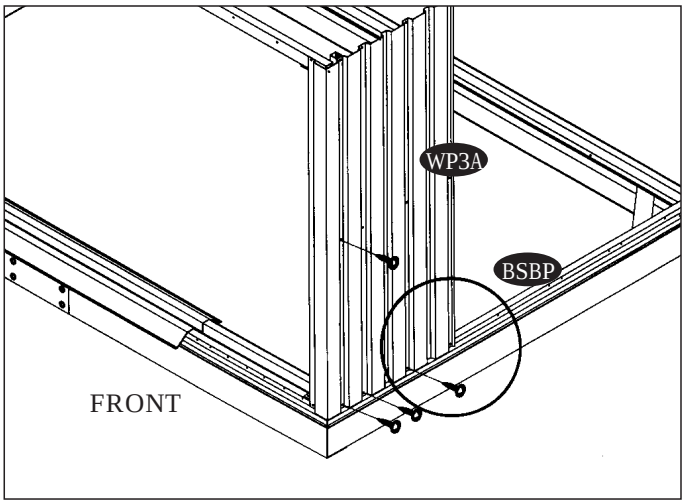

11. Place the wall panel (WP2A) on the base bar (BBFP). Line up the holes with base bar.
Secure with (S1) Screws.

Tip

First fix the middle screws (top or bottom) then go to the edges.

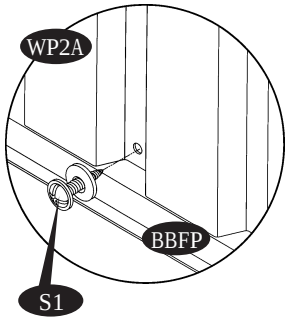

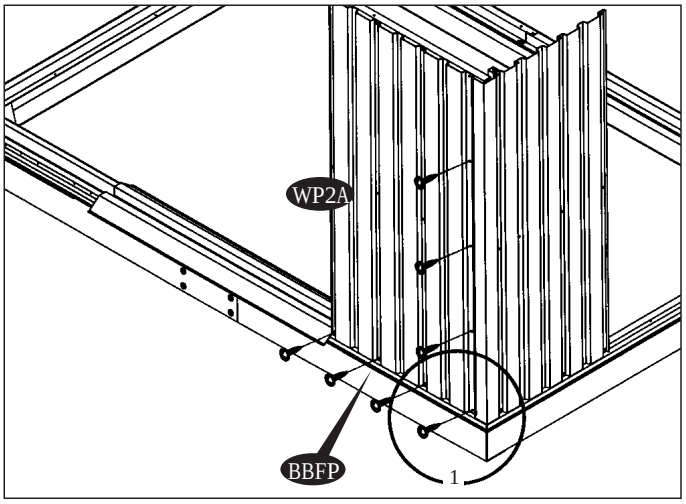

12. Insert the Ventilation Blocking Cover (VBCF) in between the sliding channel (SRBP) and the wall panel (WP2A). Lineup the holes with the sliding channel & secure with (S1) screws.

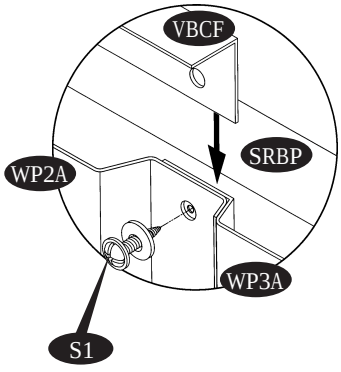

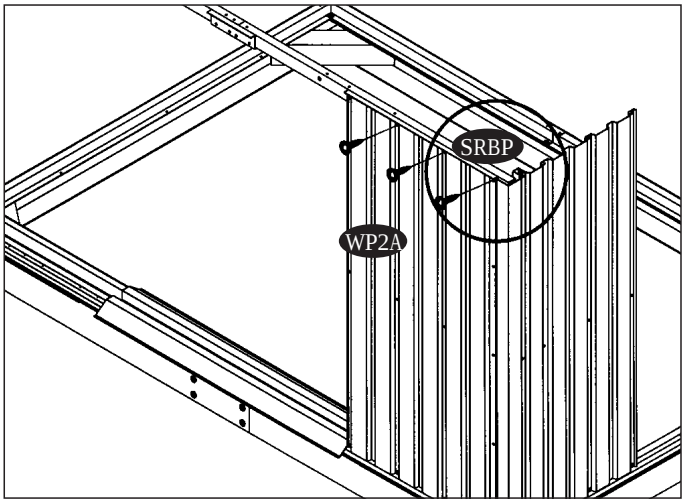

IMPORTANT: USE HAND GLOVES TO PREVENT INJURY.

13. Fix to door column bottom fitting (DCBFP) on the base bar (BBFP) with (S1) screws.

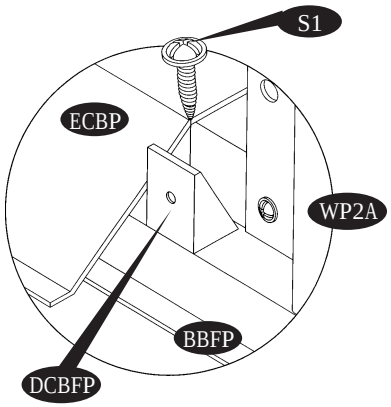

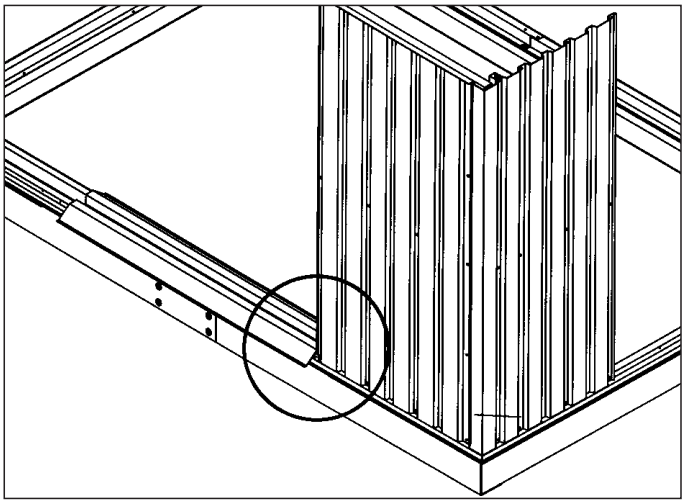

14. Place the right Door column (DCRP) on top of the base bar (BBFP) and insert into the wall panel (WP2A). Line up the holes with wall panel and secure with (S1) screws.

Note

Make sure the door column bottom fitting to be inside the door column.

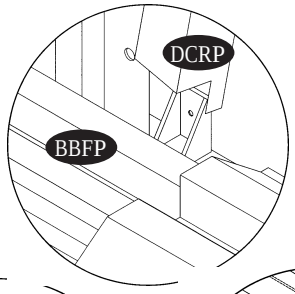

Fig.1

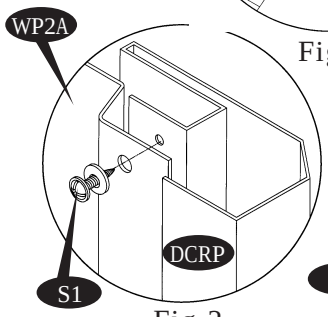

Fig.2

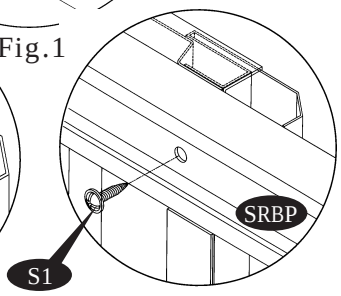

Fig.3

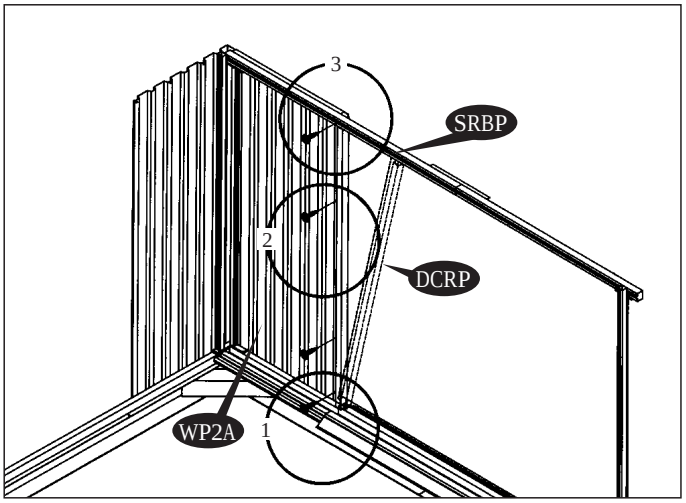

15. Fix the door column bottom to the fitting (DCBFP) with (S1) screws.

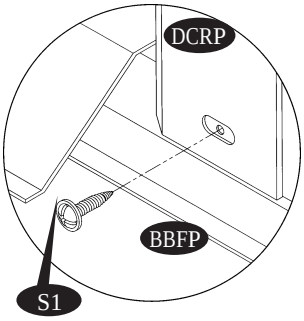

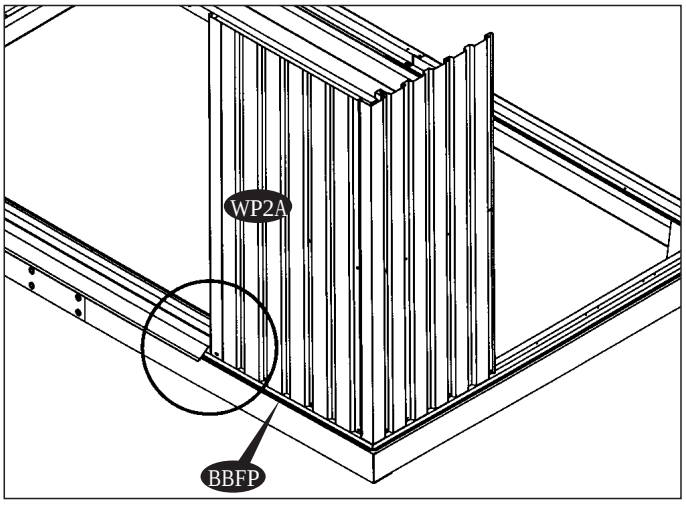

IMPORTANT: USE HAND GLOVES TO PREVENT INJURY.

16. Assemble the center band (CB1P) with column fitting (CFP). Secure with (S1) screw at one end. Make 2 Sets.

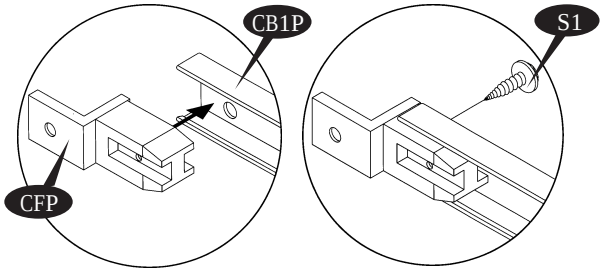

Fig.1

Fig.2

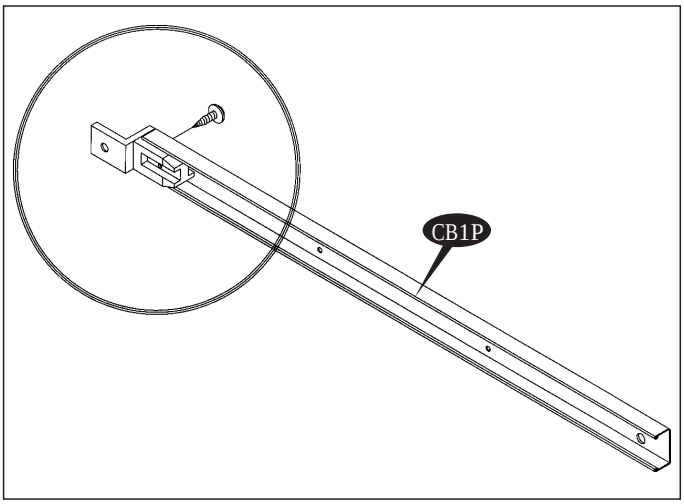

17. Fix the column fitting (CFP) to the front column (COSP) with (S1) screws from inside, fix the other end to the Door Column (DCRP) through the wall panel with (S1) screw from inside.

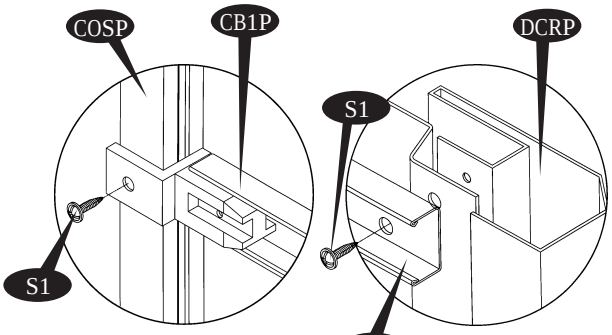

Fig.1

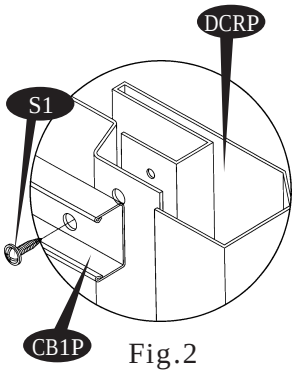

Fig.2

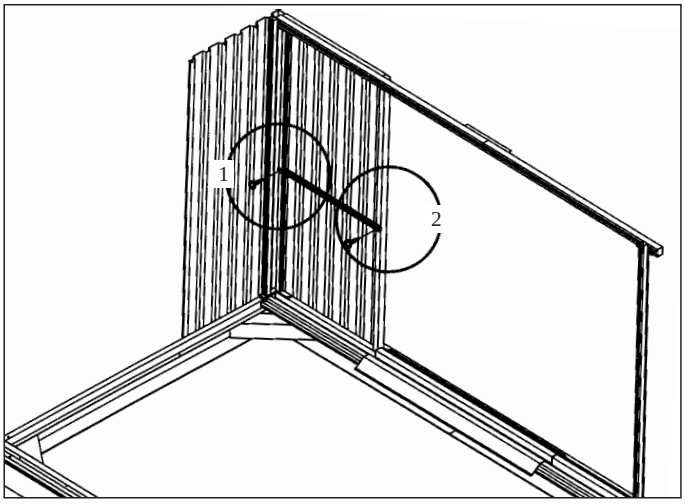

18. Secure the wall panel (WP2A) to the center band (CB1P) with (S7) screws with washer from outside.

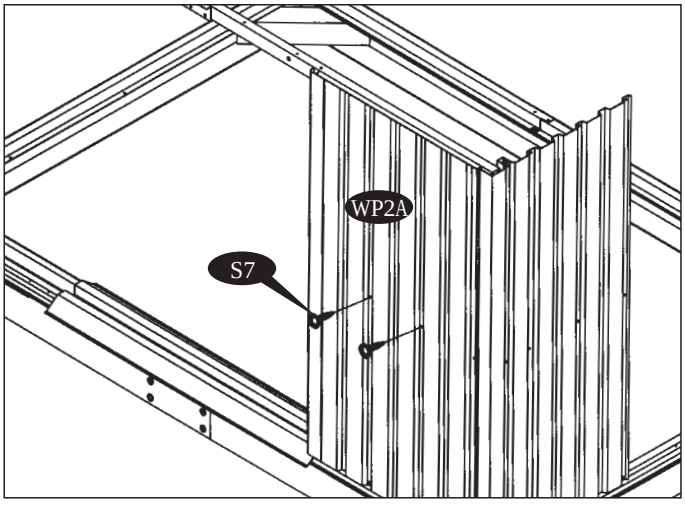

IMPORTANT: USE HAND GLOVES TO PREVENT INJURY.

19. Place the wall panel (WP3A) on the base bar (BSBP) front left side. Line up the holes with base bar. Secure with (S1) screws with washers from out side.

Tip

First fix the middle screws then go to the edges.

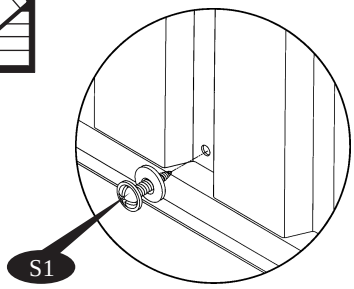

Fig.1

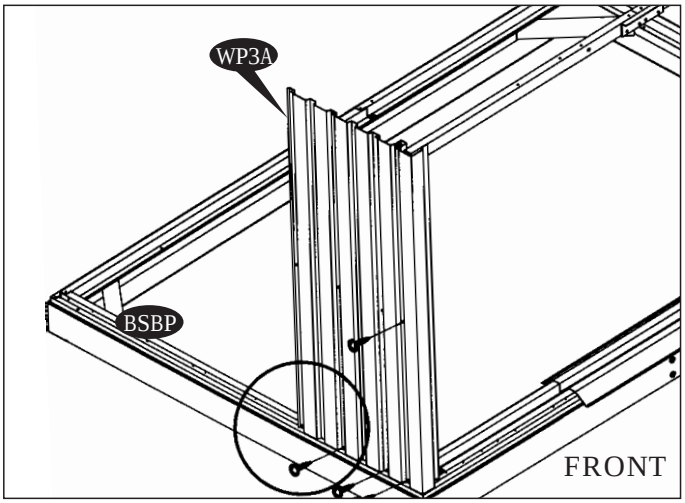

20. Place the wall panel (WP1A) on the base bar (BBFP). Line up the holes with base bar. Secure with (S1) screws.

Tip

First fix the middle screws (top or bottom) then go to the edges.

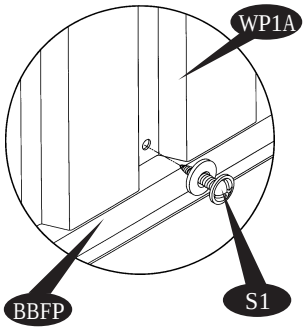

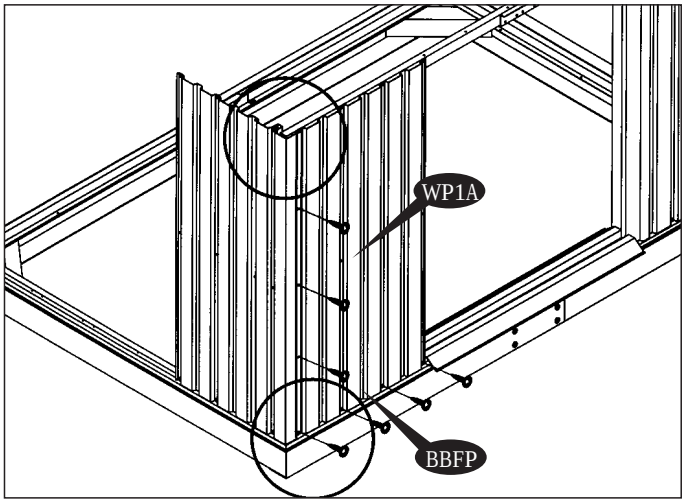

21. Insert the Ventilation Blocking Cover (VBCF) in between the sliding channel (SLBP) and the wall panel (WP1A). Lineup the holes with the sliding channel & secure with (S1) screws.

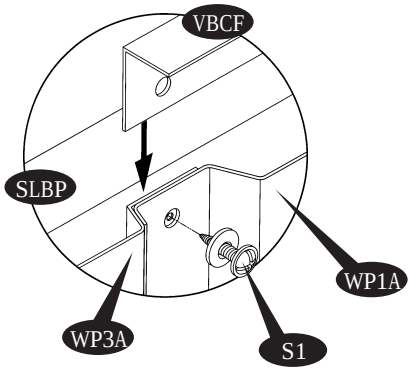

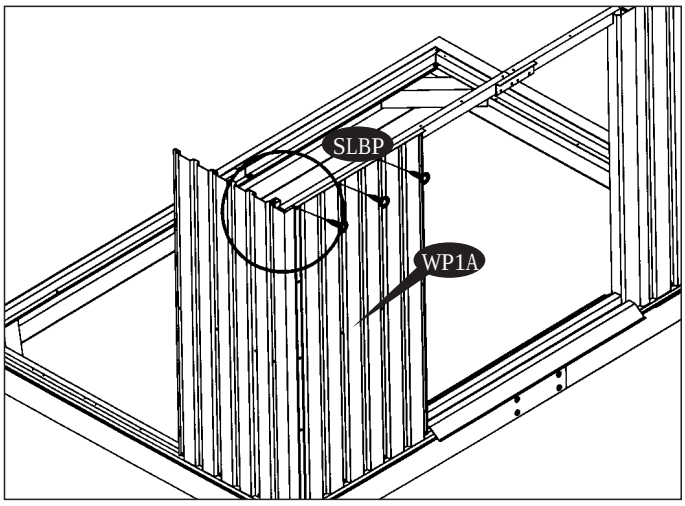

IMPORTANT: USE HAND GLOVES TO PREVENT INJURY.

22. Fix to door column bottom fitting (DCBFP) on the base bar (BBFP) with (S1) screws.

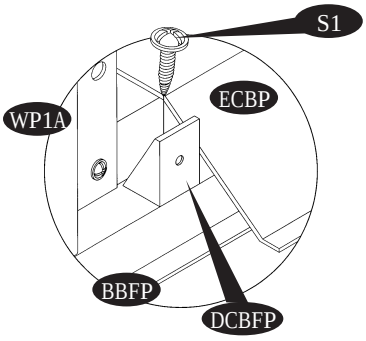

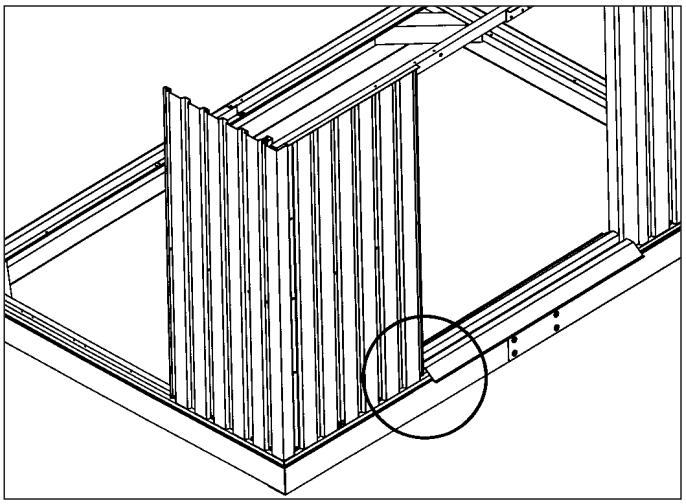

23. Place the left Door Column (DCLP) on top of the base bar (BBFP) and insert in to the wall panel (WP1A). Line up the holes with wall panel and secure with (S1) screws.

Note

Make sure the door column fitting to be inside the door column

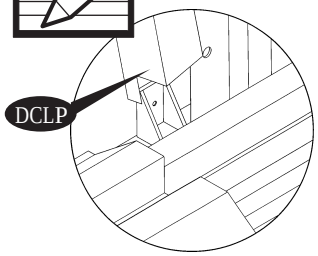

Fig.1

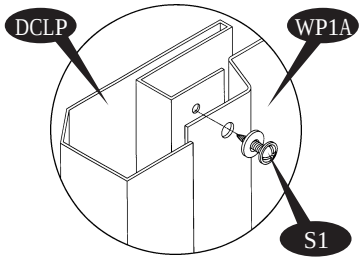

Fig.2

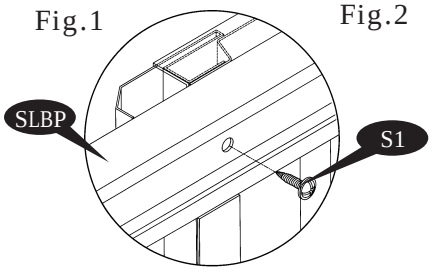

Fig.3

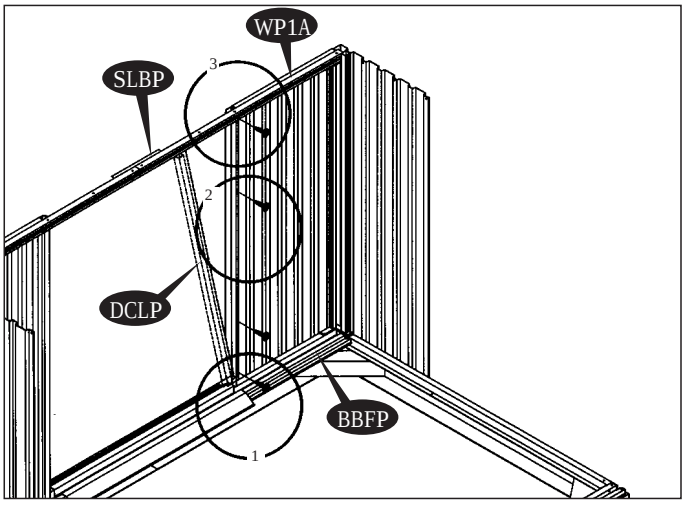

24. Fix the door column bottom to the fitting (DCBFP) with (S1) Screws.

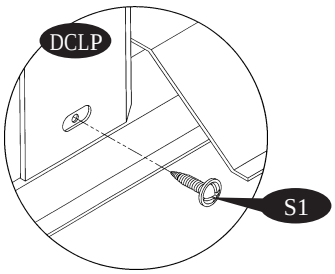

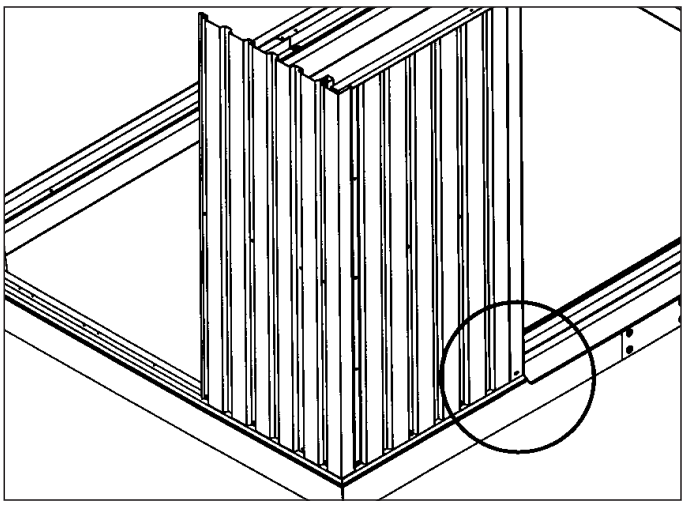

IMPORTANT: USE HAND GLOVES TO PREVENT INJURY.

25 Fix the Column fitting (CFP) to the front Column (COSP) with (S1) screw from inside.
Fix other end to the Door Column (DCLP) through the wall panel with (S1) screw from inside.

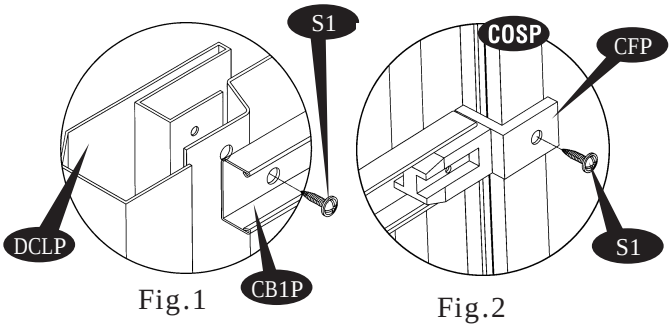

Fig.1

Fig.2

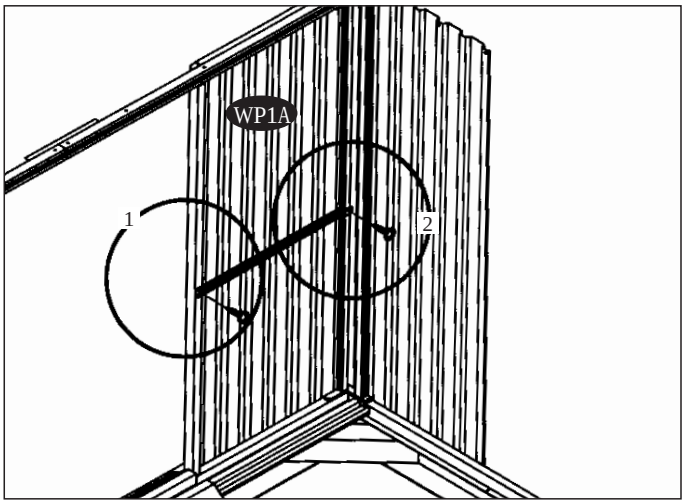

26. Secure the wall panel (WP1A)to the centre band (CB1P) with (S7) screws from outside.

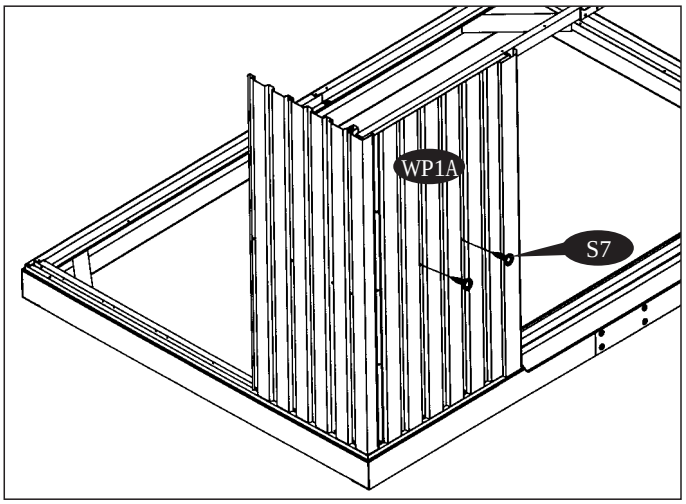

27. Place the Corner Column fitting (CCFP) on top of the base bar at the back side on both corners. Secure with (S1) screws.

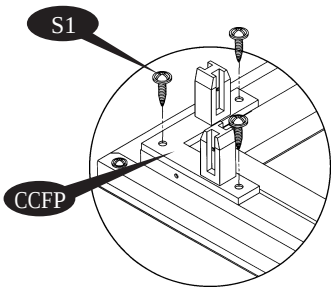

Fig.1

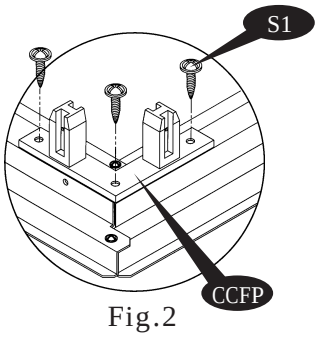

Fig.2

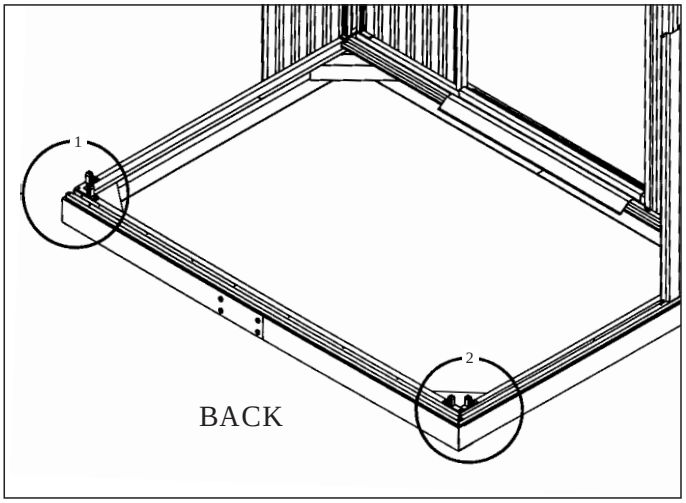

IMPORTANT: USE HAND GLOVES TO PREVENT INJURY.

28. Insert the column (COLP) into the Corner Column fitting (CCFP) and secure with (S1) screws.

Note

Make sure the direction of the Column opening and arrow up as per blowup

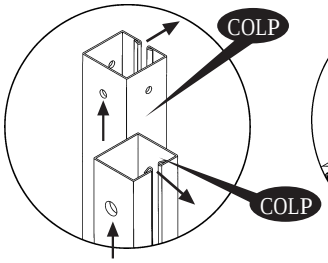

Fig.1

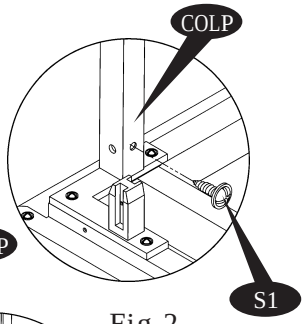

Fig.2

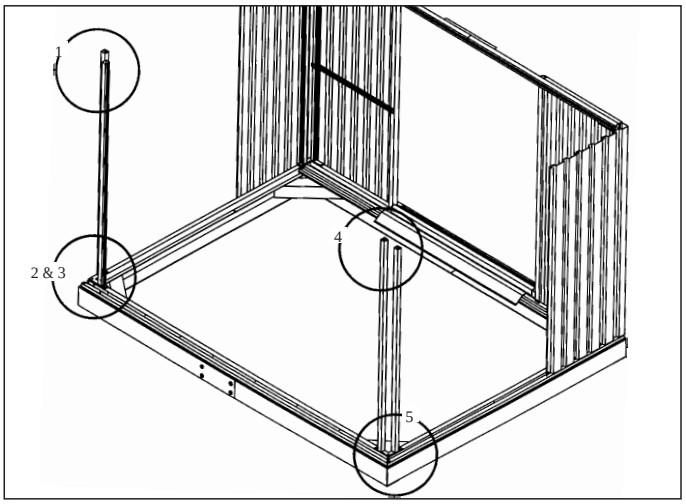

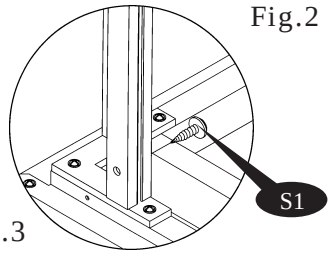

Fig.3

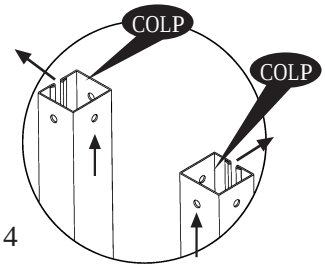

Fig.4

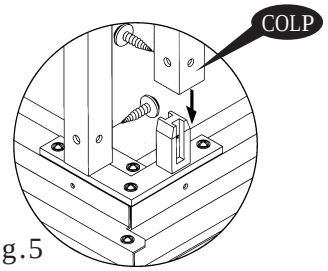

Fig.5

29. Fix the Column Support (CS) to the columns with two (S7) screws at both corners.

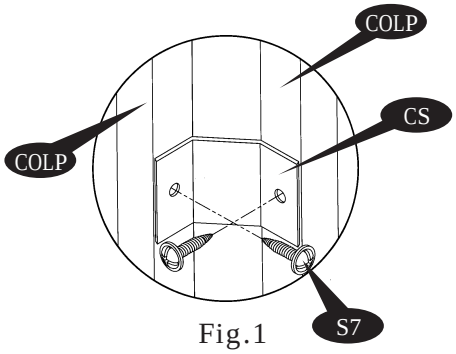

Fig.1

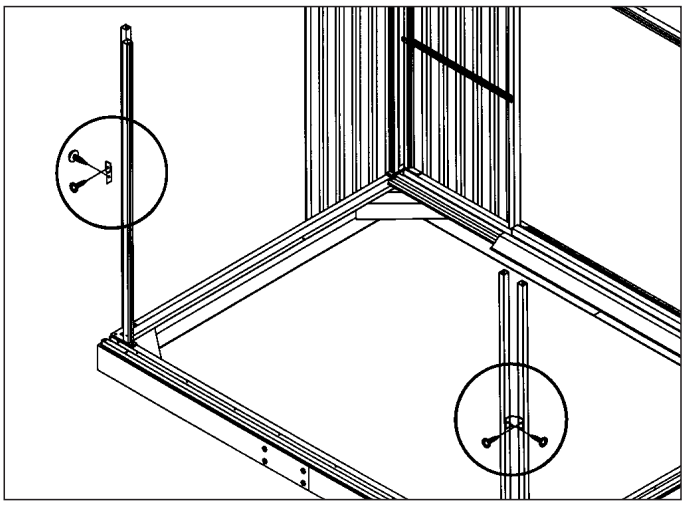

30. Place the wall panel (WP3A) on the base bar side (BSBP) at back left .Line up the hole with base bar and secure with (S1) screws with washers from out side.

Tip

First fix the middle screws then go to the edges.

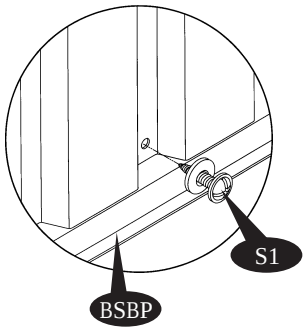

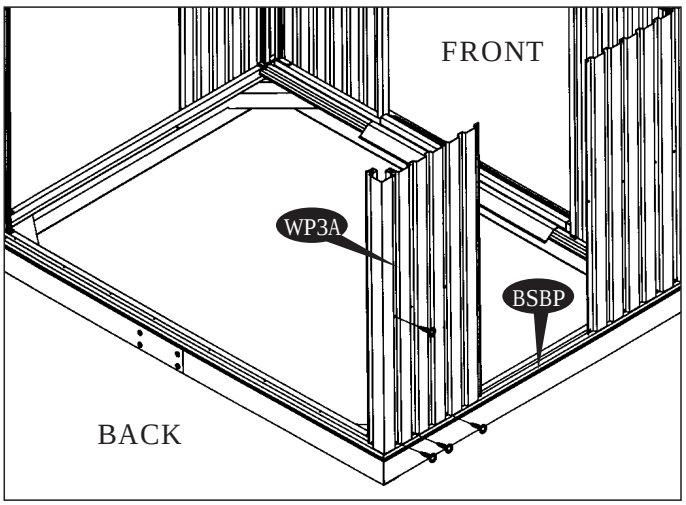

IMPORTANT: USE HAND GLOVES TO PREVENT INJURY.

31. Place the wall panel (WP4A) on the base bar back left (BLBP). Line up the holes with base bar and secure with (S1) screws. See the blow up

Note

Make sure the overlapping position of panels is as shown in fig. 2.

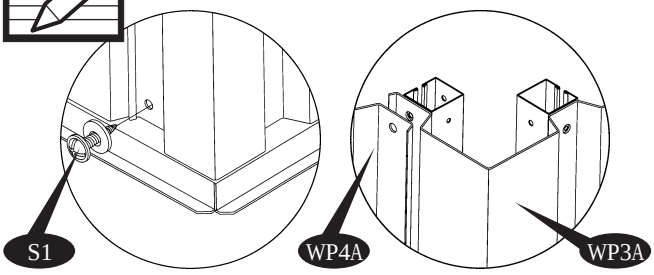

Fig.1 Fig.2

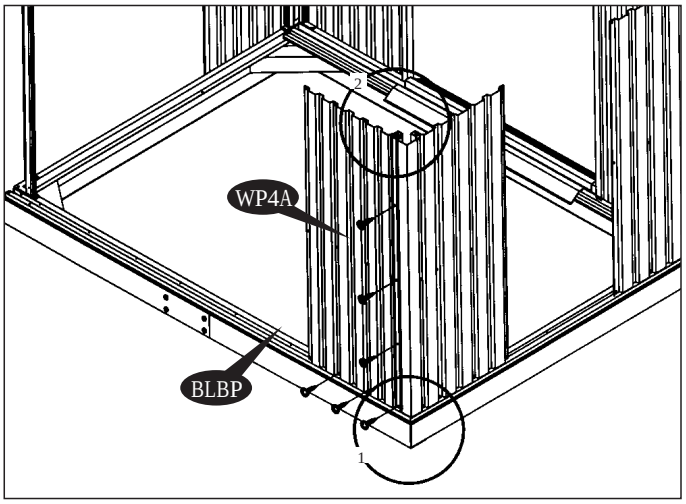

Tip

First fix the middle screws then go to the edges.

32. Place the wall panel (WP3A) on the base bar (BSBP). Line up the holes with base bar and secure with (S1) screws with washer from out side.

Tip

First fix the middle screws then go to the edges.

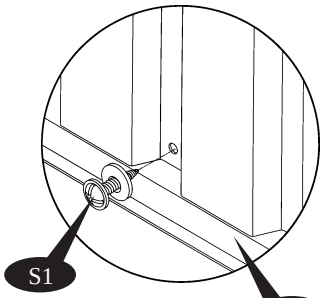

Fig.1

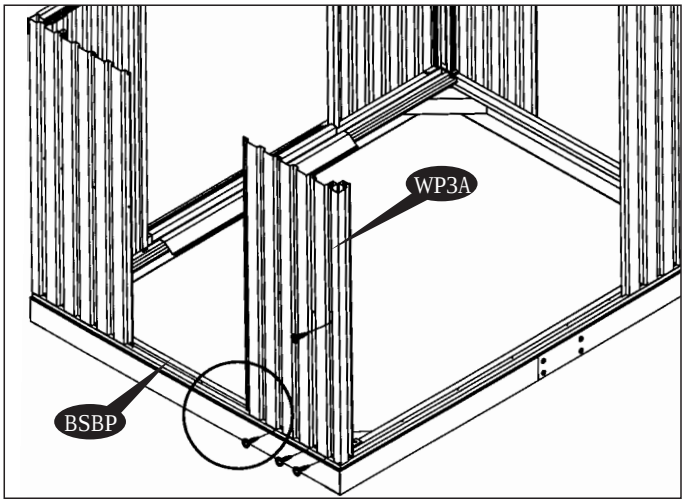

33. Place the wall panel (WP4A) on the base bar (BRBP). Line up the hole with base bar and secure with (S1) screw with washer from out side.

Note

Make sure the overlapping position of panels is as shown in fig. 2.

Tip

First fix the middle screws (top or bottom) then go to the edges.

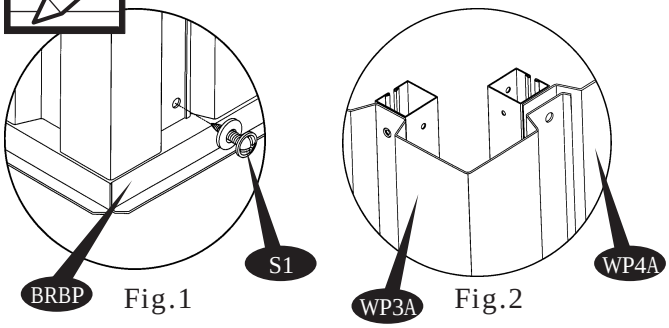

Fig.1 Fig.2

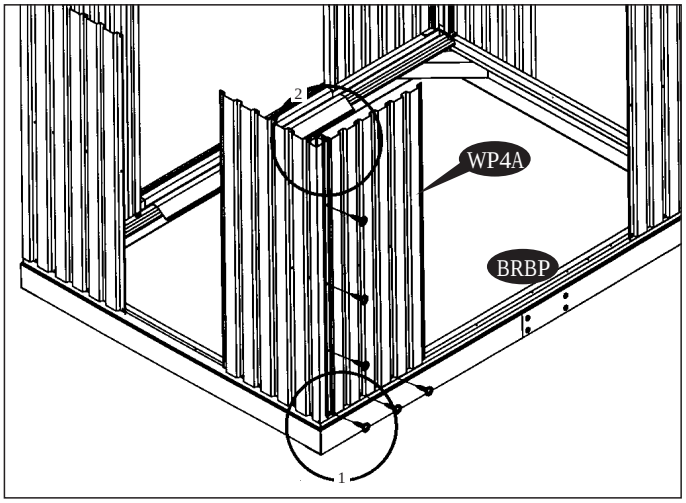

IMPORTANT: USE HAND GLOVES TO PREVENT INJURY.

34. Assemble the top back angle left & right (ABLBP & ABRBP) together with (S7) screws.
See the blow up

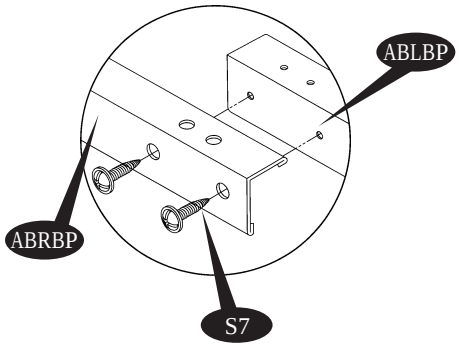

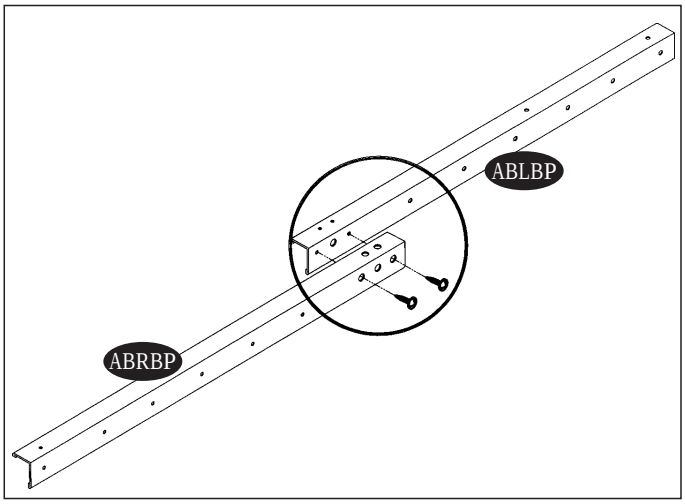

35. Place the assembled top angle back in between the column and back wall panel top side. Then insert the Ventilation Blocking Cover (VBCF) in between the top angle and the wall panel. Line up the holes with panel and secure with (S1) screws from outside.

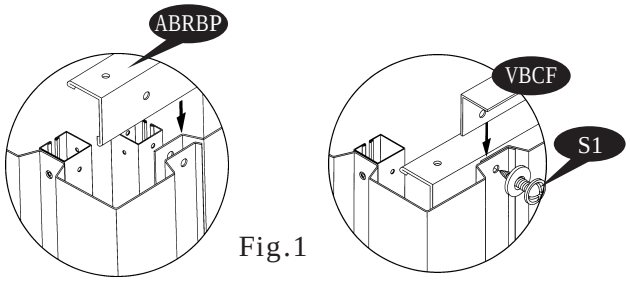

Fig.1

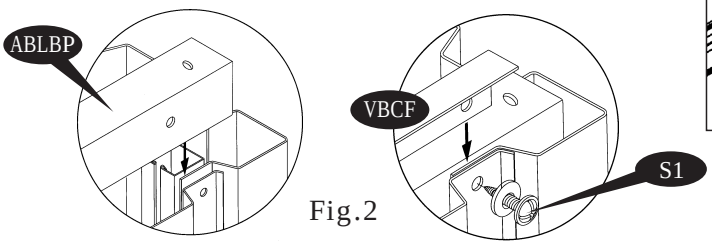

Fig.2

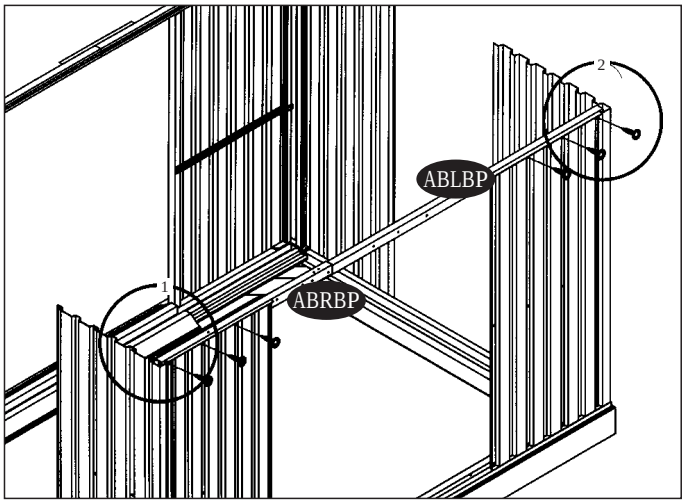

36. Place the top angle side (ASBP) on top of back top angle (ABLBP) and top of sliding channel (SLBP). Secure with (S1) screws from top.

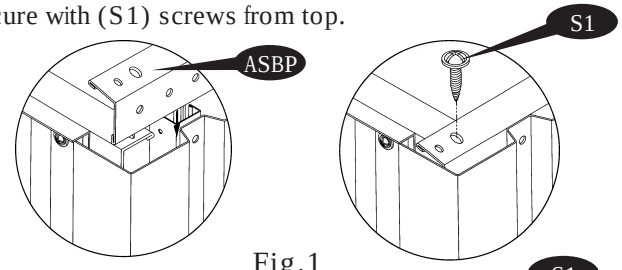

Fig.1

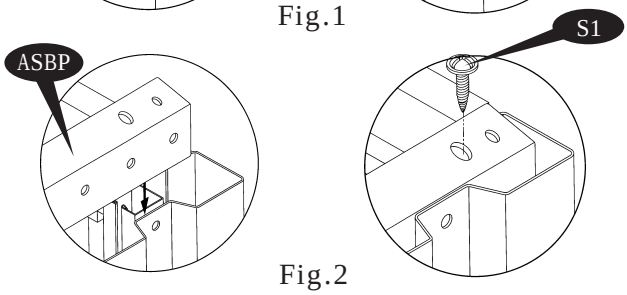

Fig.2

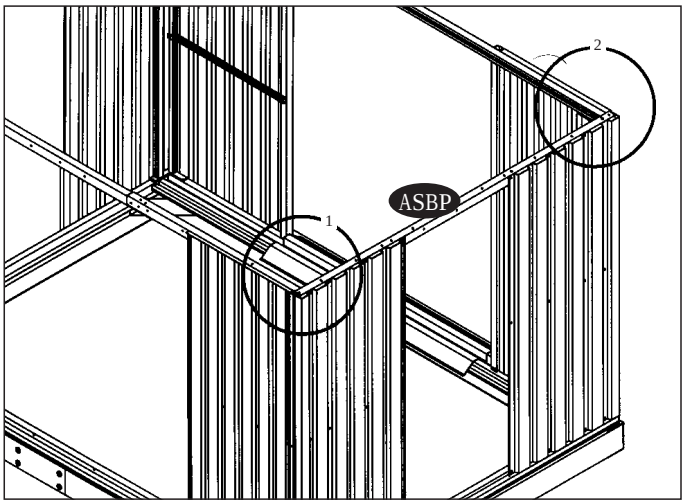

IMPORTANT: USE HAND GLOVES TO PREVENT INJURY.

37. Secure the wall panel to the top angle with (S1) screws.

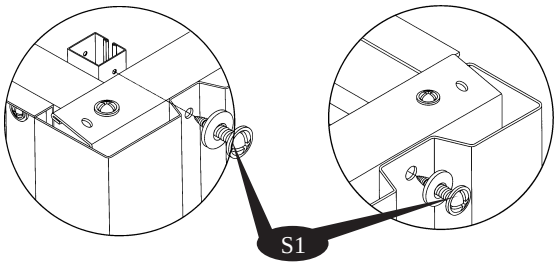

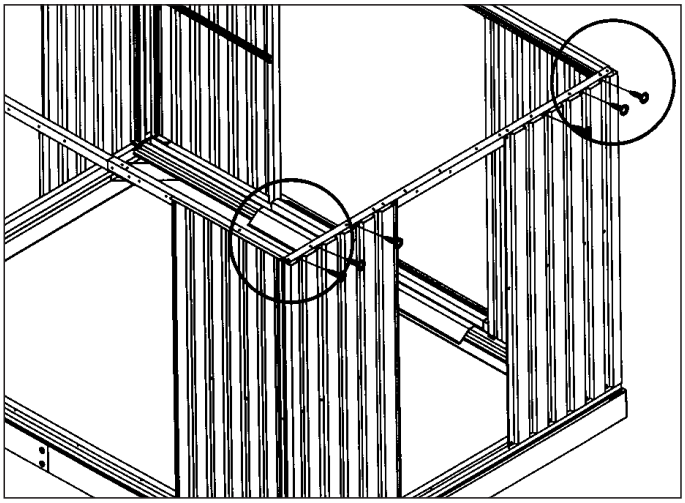

38. Place the top angle side (ASBP) on top of sliding channel (SRBP) and back top angle (ABRBP) secure with (S1) screws.
See Details.

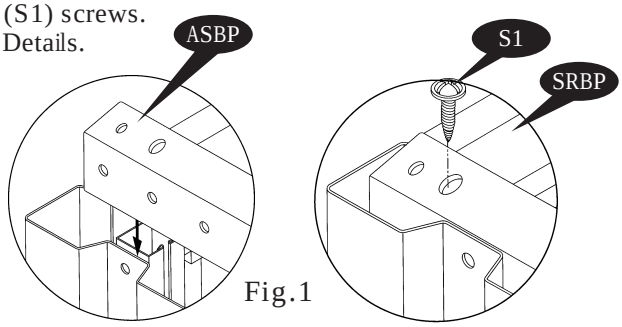

Fig.1

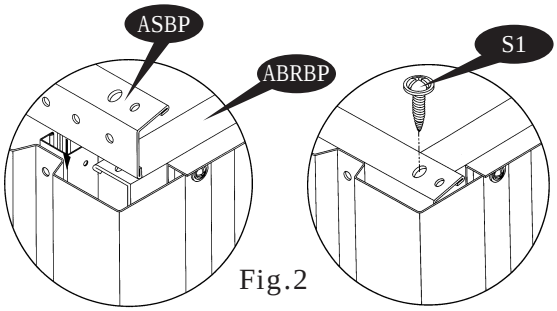

Fig.2

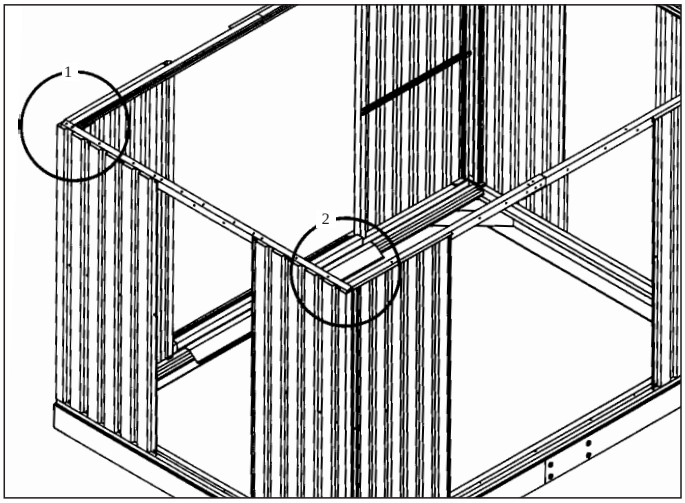

39. Secure the Wall Panel to the top angle with (S1) screws.

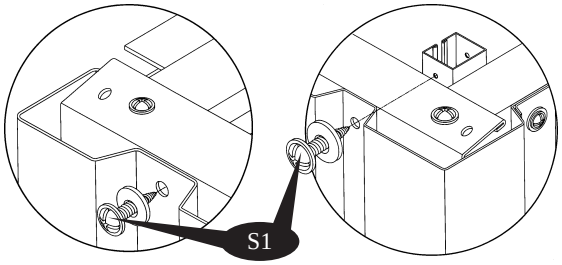

Fig.1 Fig.2

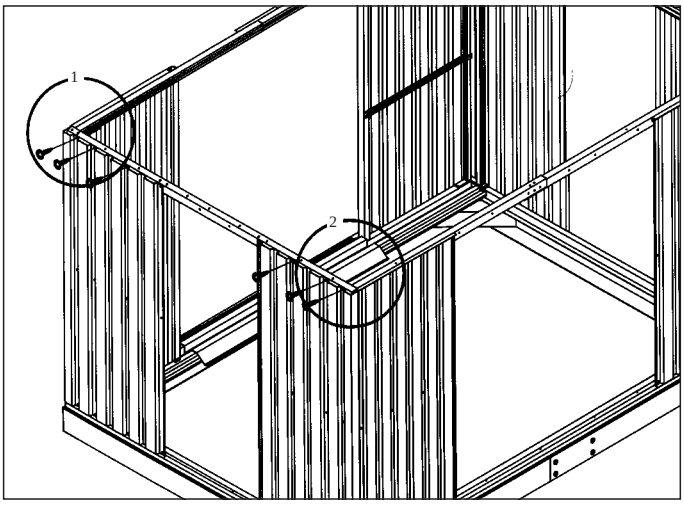

IMPORTANT: USE HAND GLOVES TO PREVENT INJURY.

40. Assemble the Column fitting (CFP) with all columns (COLP) with (S1) screw.

Note

Make sure the direction of arrow (Fig. 1) and opening of the Column (Fig. 2) as Shown

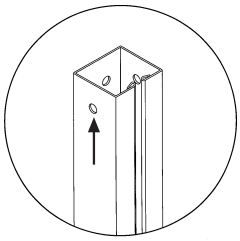

Fig.1

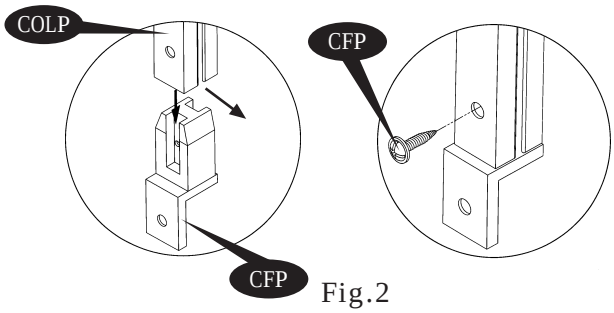

Fig.2

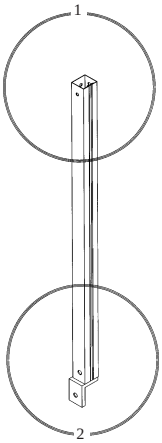

41. Fix two column fitting with columns to the base bar (BSBP) with (S1) screws from inside.

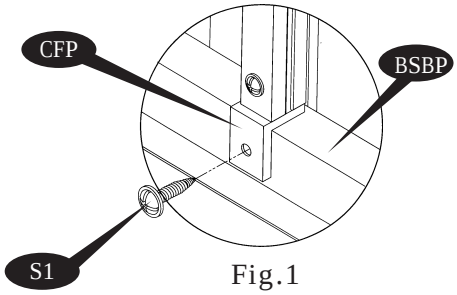

Fig.1

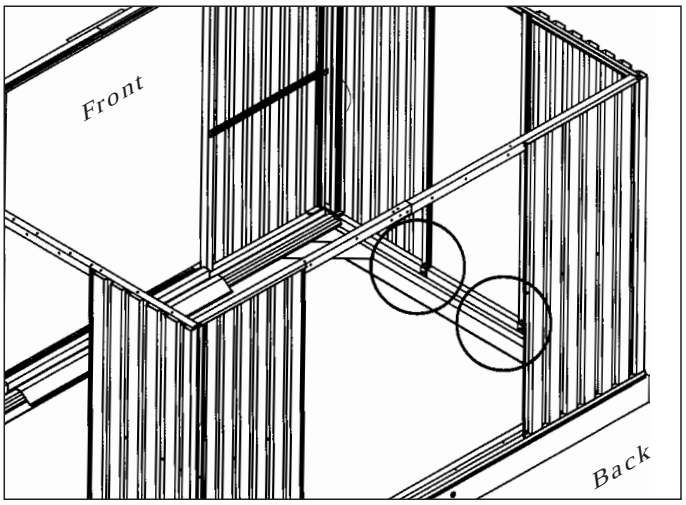

42. Place the Wall Panel (WP4A) on the base bar side (BSBP). Line up the holes with base bar and top angle.

1. Secure the Panel at bottom with (S1) screws to the base bar from out side.

2. Secure the Panel at top with (S1) screw through the top angle to the Column (COLP)

Tip

First fix the middle screws (top or bottom) then go to the edges.

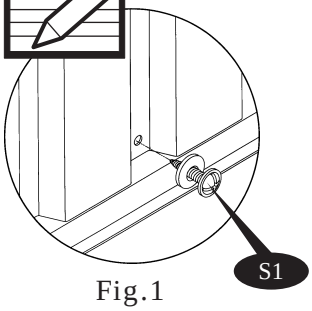

Fig.1

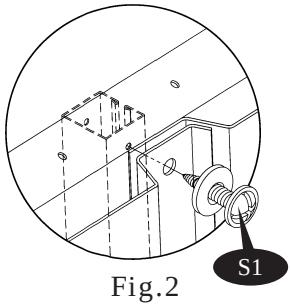

Fig.2

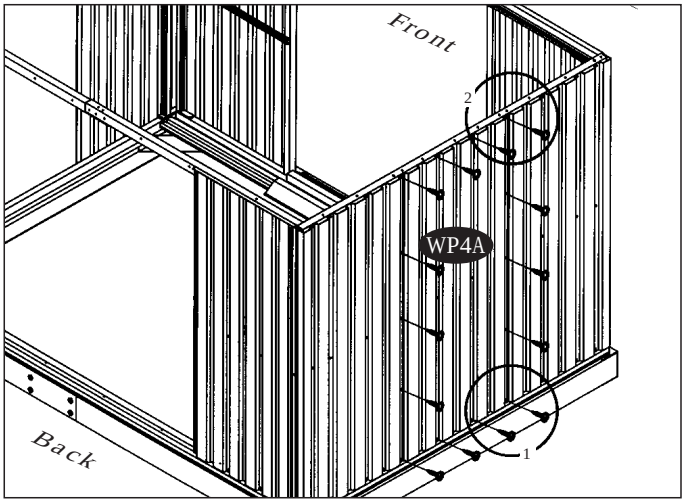

IMPORTANT: USE HAND GLOVES TO PREVENT INJURY.

43. Fix the Center band fitting (CBFP) to the Column with (S1) screw.

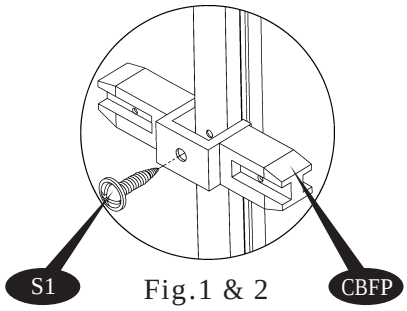

Fig.1 & 2

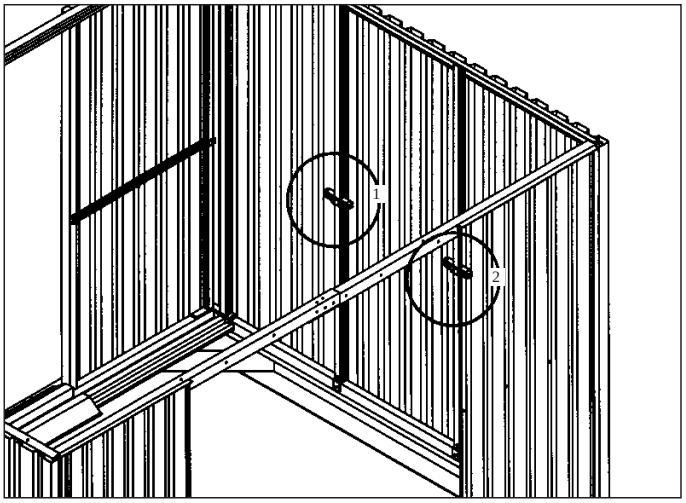

44. Fix the Column fitting (CFP) to the Column with (S1) screw as shown.

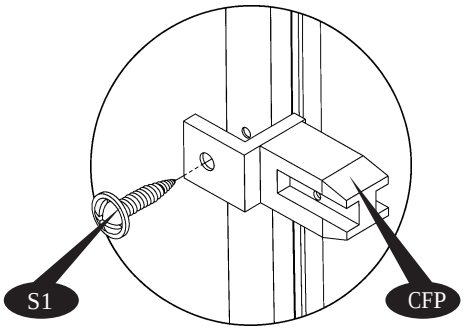

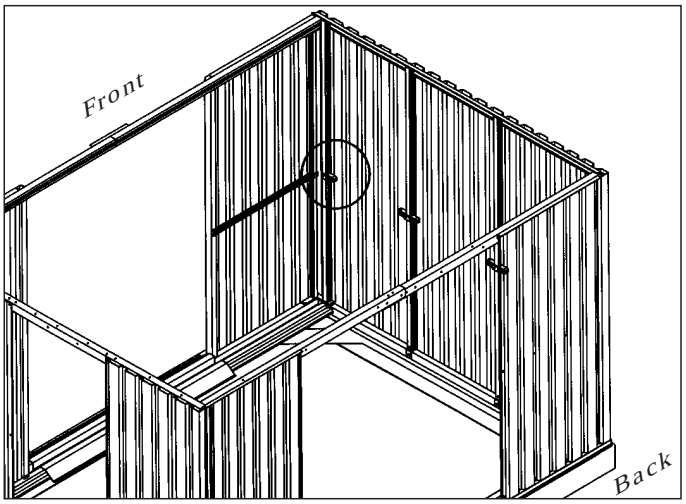

45. Fix the Center band (CB2P) to the Column fitting (CFP) with (S1) screw. See the Fig 1.
Fix the other end of the Center band to the Center band fitting (CBFP) with (S1) screw. See the fig. 2

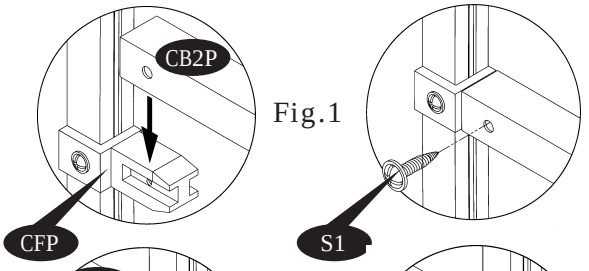

Fig.1

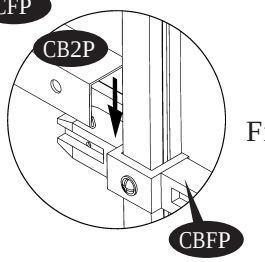

Fig.2

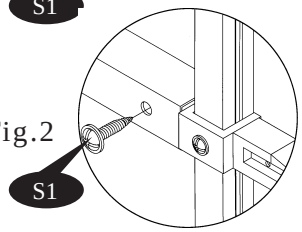

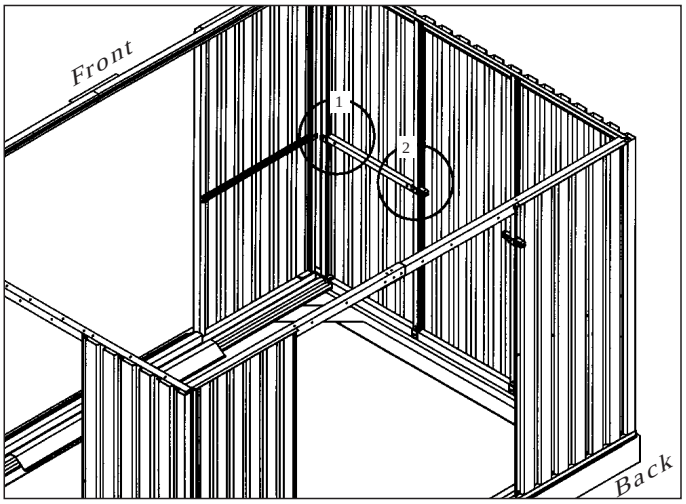

IMPORTANT: USE HAND GLOVES TO PREVENT INJURY.

46. Fix the Center band (CB4P) to the Center band fitting with (S1) screws.
See fig. 1 & 2.

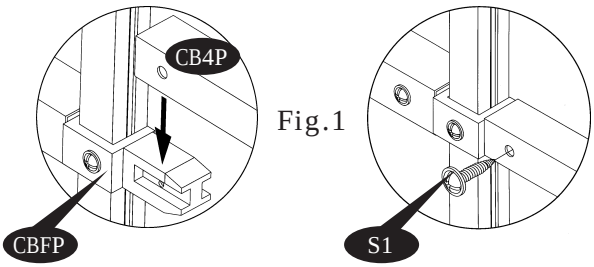

Fig.1

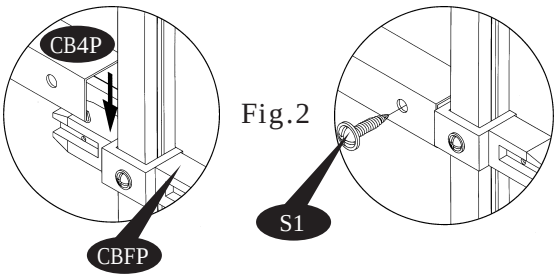

Fig.2

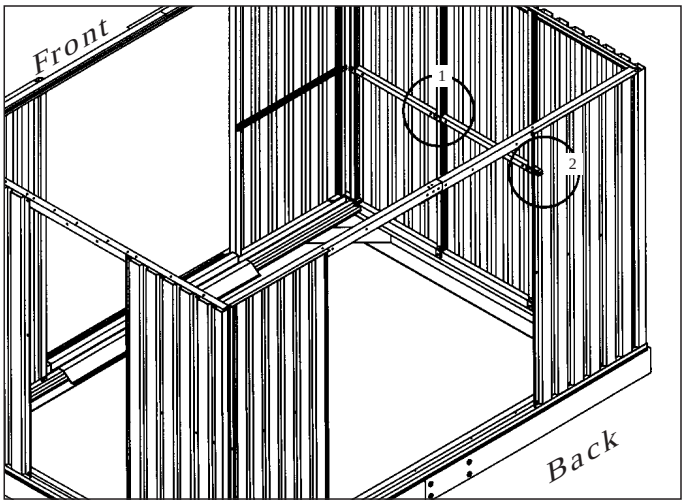

47. Fix the Column fitting (CFP) to the Column with (S1) screw as shown.

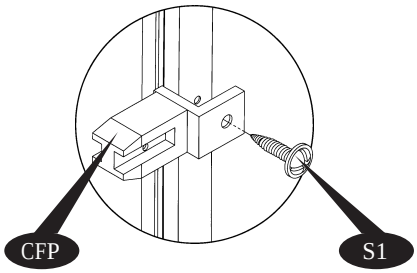

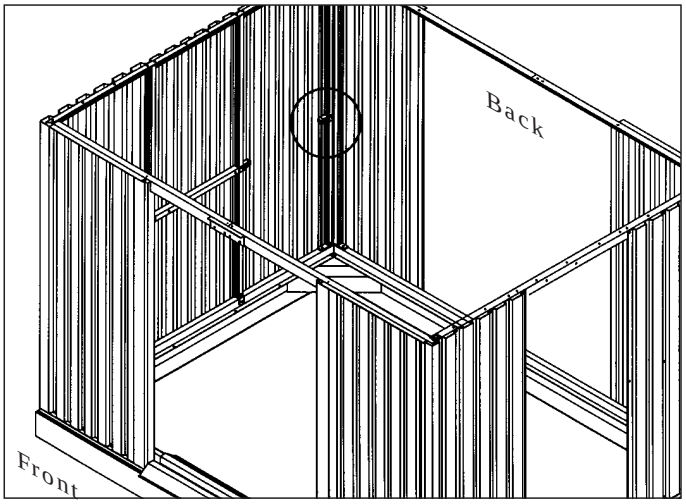

48. Fix the Center band (CB3P) to the Center band fitting (CBFP) with (S1) screw. See fig.1
Fix the other end to the Column fitting (CFP).

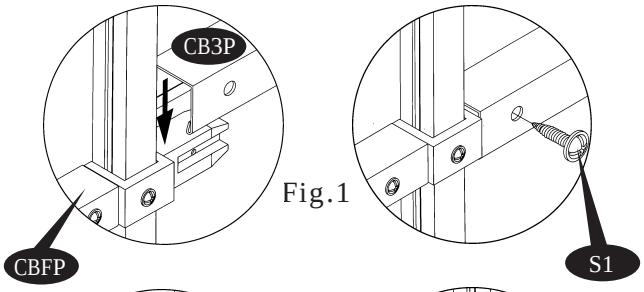

Fig.1

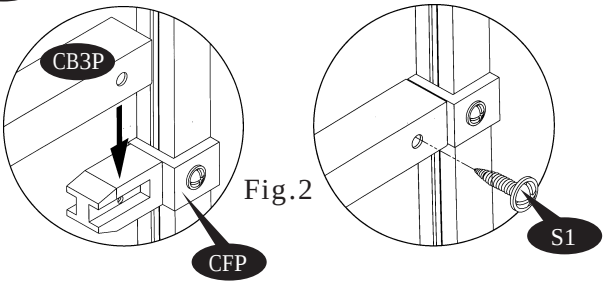

Fig.2

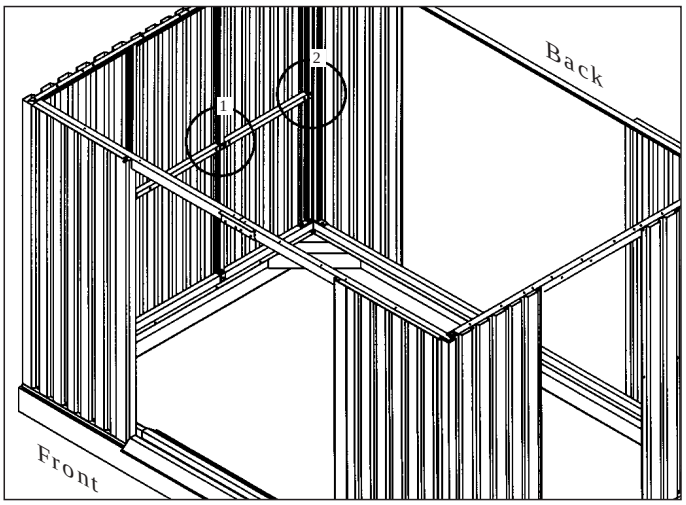

IMPORTANT: USE HAND GLOVES TO PREVENT INJURY.

49. Secure the Panels to the Center bands with (S1) screws with washer from out side.

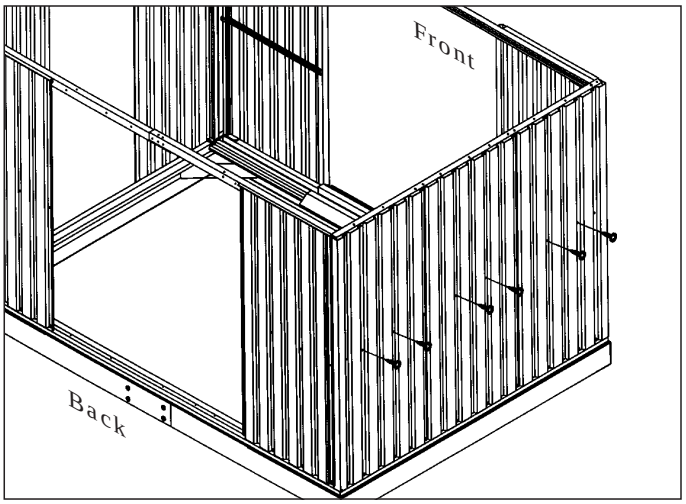

50. Fix two Column fittings (CFP) with Columns to the other side of base bar (BSBP) with (S1) screws from inside.

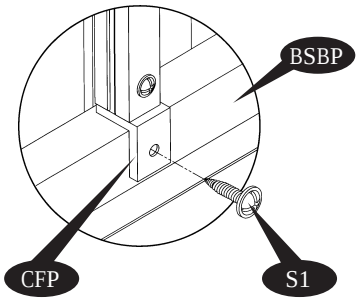

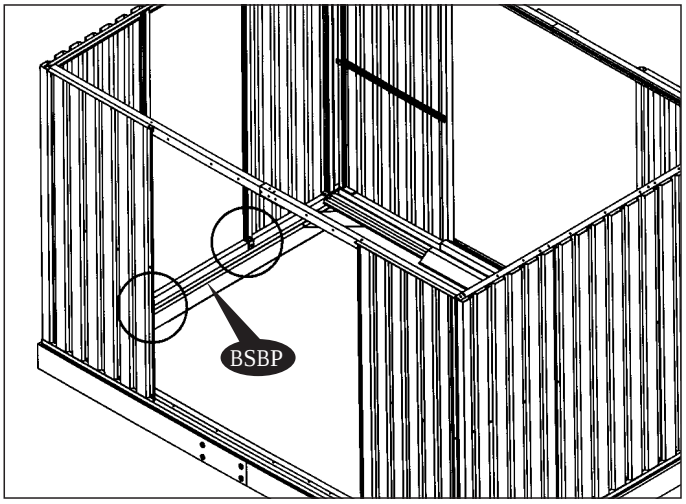

51. Place the Wall Panel (WP4A) on the base bar side (BSBP) Line up the holes with base bar and top angle.

1. Secure the Panel at bottom with (S1) screws to the base bar from out side.

2. Secure the Panel at top with (S1) Screw through the top angle to the Column (COLP).

Tip

First fix the middle screws (top or bottom) then go to the edges.

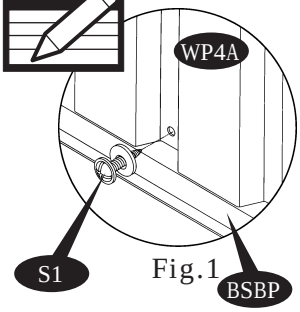

Fig.1

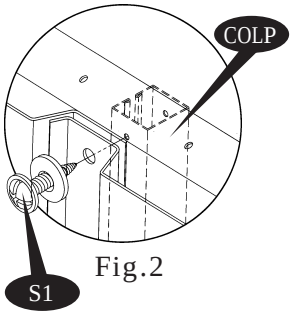

Fig.2

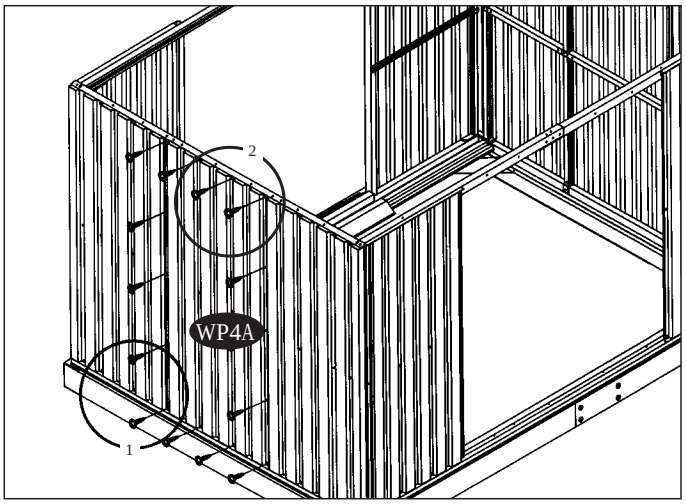

IMPORTANT: USE HAND GLOVES TO PREVENT INJURY.

52. Fix the Center band fitting (CBFP) to the Column with (S1) screws. See Fig. 1 & 2.
Fix the Column fitting (CFP) to the Column with (S1) screw. See Fig. 3

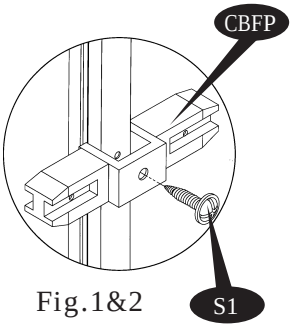

Fig.1&2

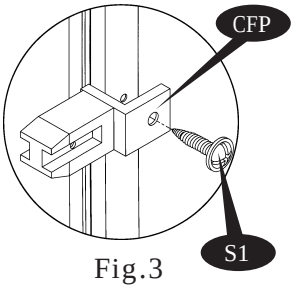

Fig.3

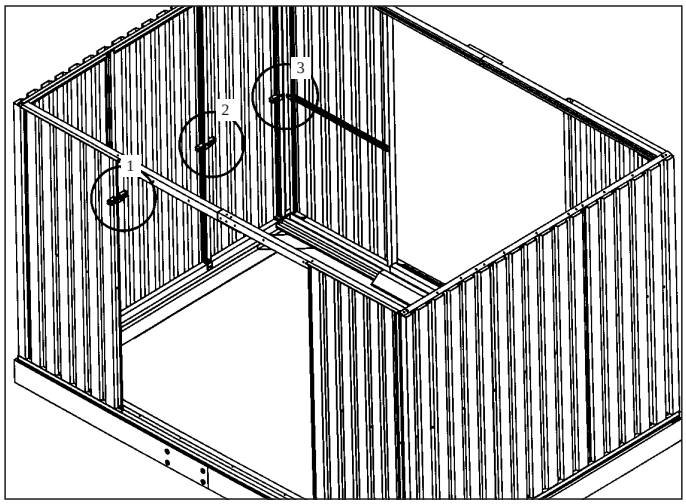

53. Fix the Center Band (CB3P) to the Column fitting with (S1) Screws. See Fig. 1
Fix the other end to the center band fitting (CBFP) with (S1) screw. See Fig. 2

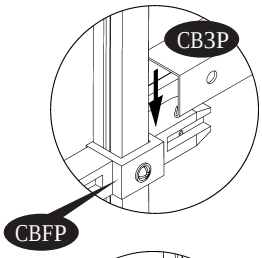

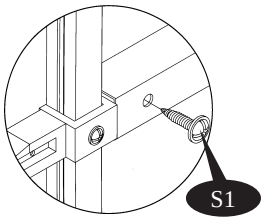

Fig.1

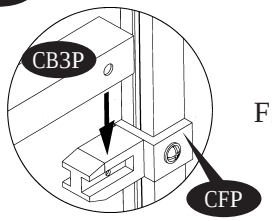

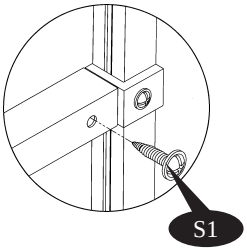

Fig.2

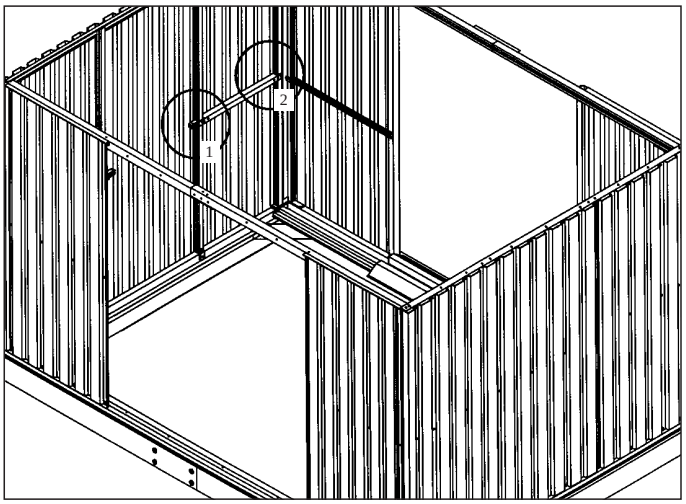

54. Fix the Center Band (CB4P) to the Center Band fitting with (S1) screws. See Fig. 1 & 2.

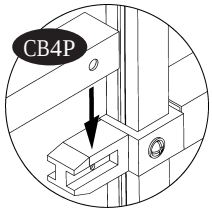

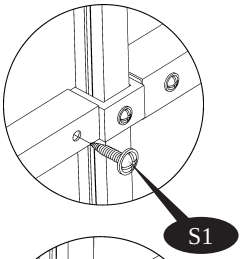

Fig.1

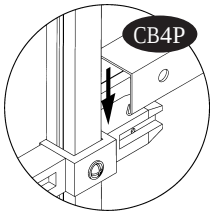

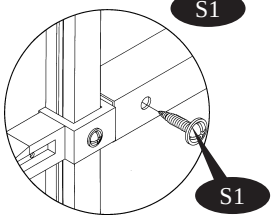

Fig.2

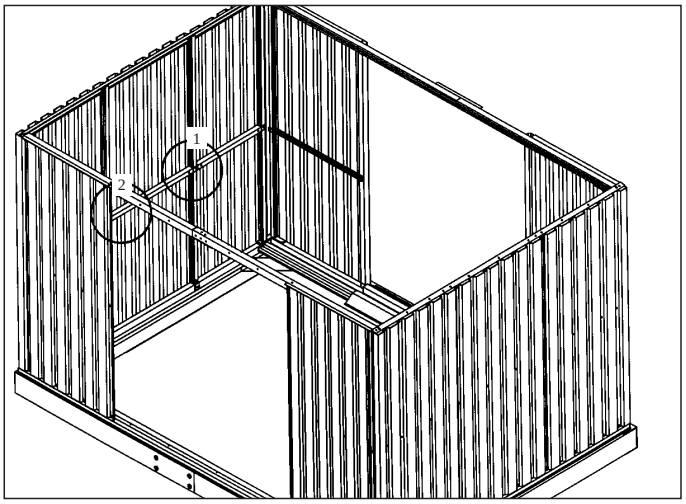

IMPORTANT: USE HAND GLOVES TO PREVENT INJURY.

55. Fix the Column fitting (CFP) to the Column with (S1) screws as shown in blow up.

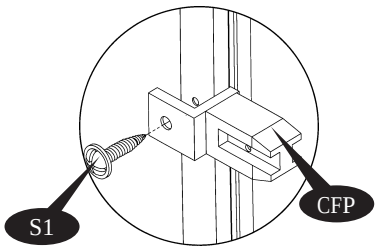

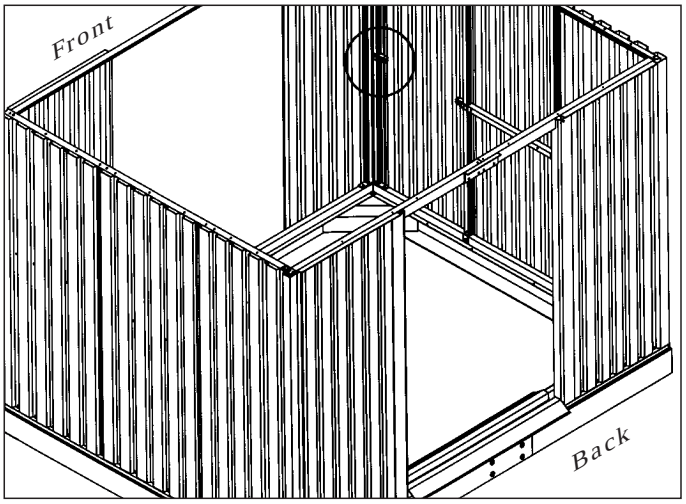

56. Fix the Center Band (CB2P) to the Center Band fitting (CBFP) with (S1) screw . See fig. 1
Fix to other end to the Column fitting (CFP) See fig. 2

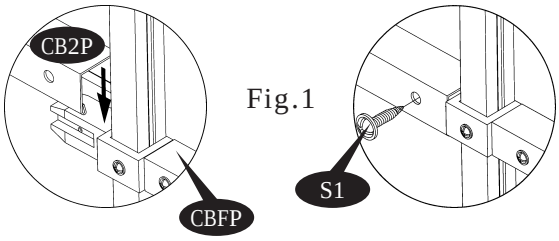

Fig.1

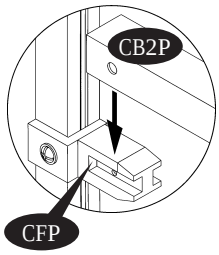

Fig.2

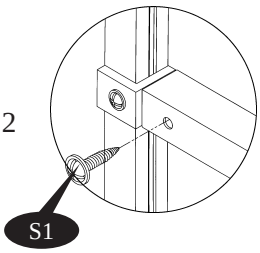

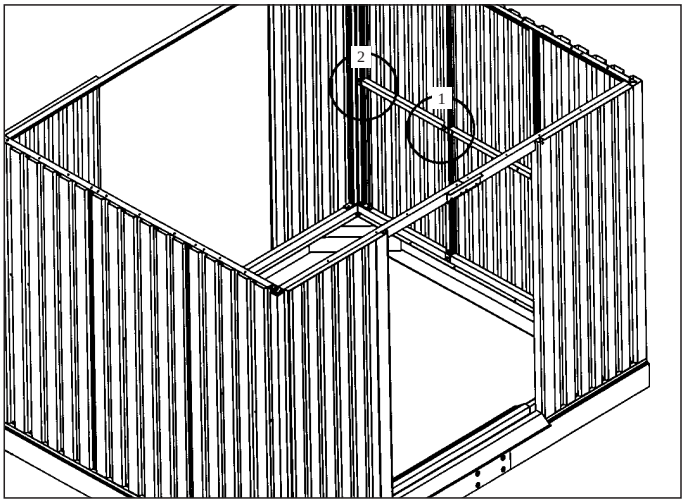

57. Secure Panel to the Center Bands with (S1) screws with washer from out side.

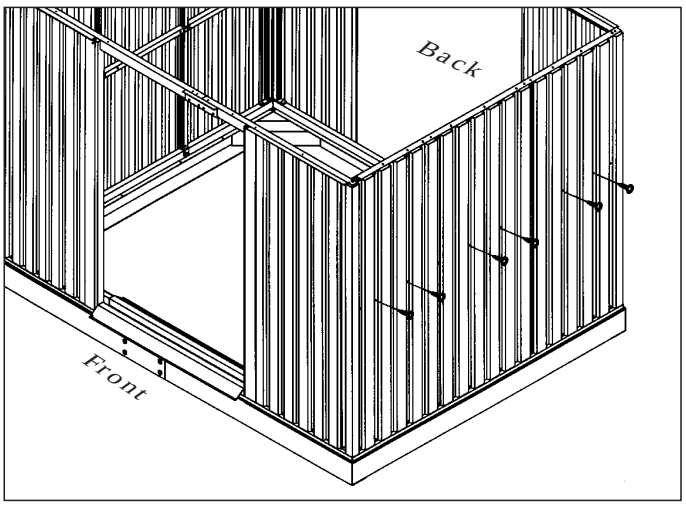

IMPORTANT: USE HAND GLOVES TO PREVENT INJURY.

58 Fix the Column fitting with Column to the back base bar with (S1) screws from inside.

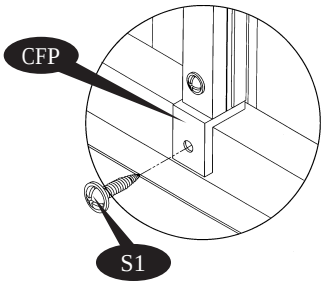

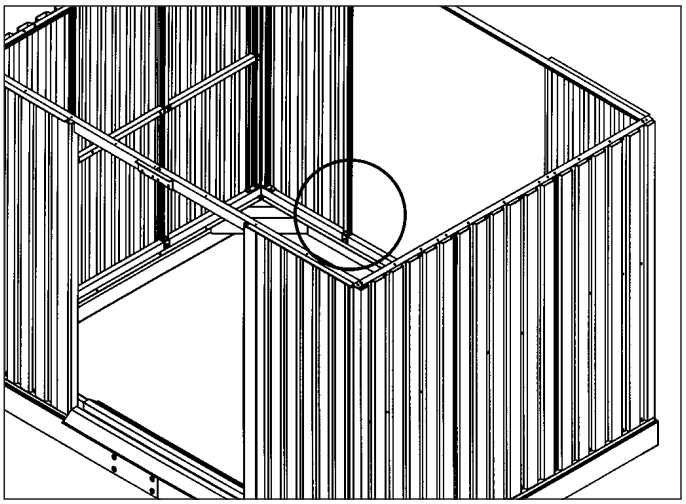

59. Place the Wall Panel (WP4A) on the back base bar. Line up the holes with base bar. Secure the Panel at bottom with (S1) screws to the base bar from out side.

Tip

First fix the middle screws (top or bottom) then go to the edges.

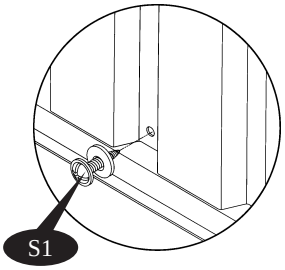

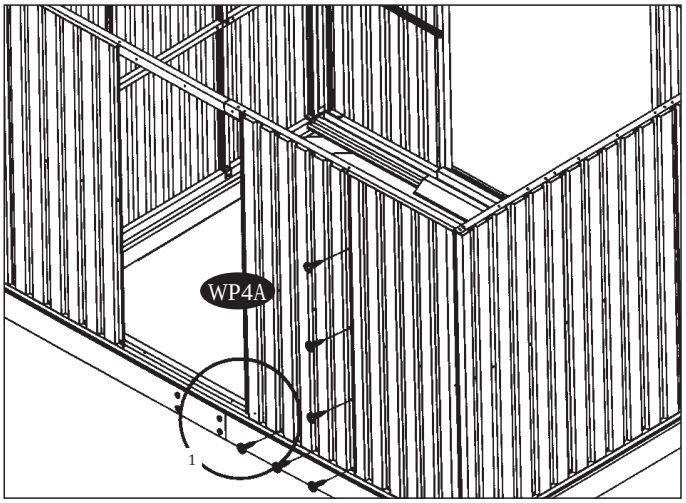

60. Insert the Ventilation Blocking Cover (VBCF) in between the top angle and the wall panel. Line up the holes with the top angle & secure with (S1) screws.

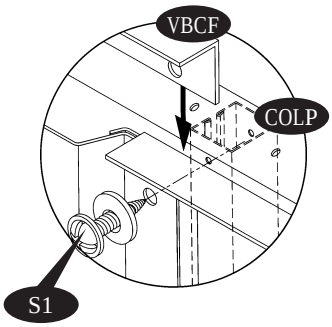

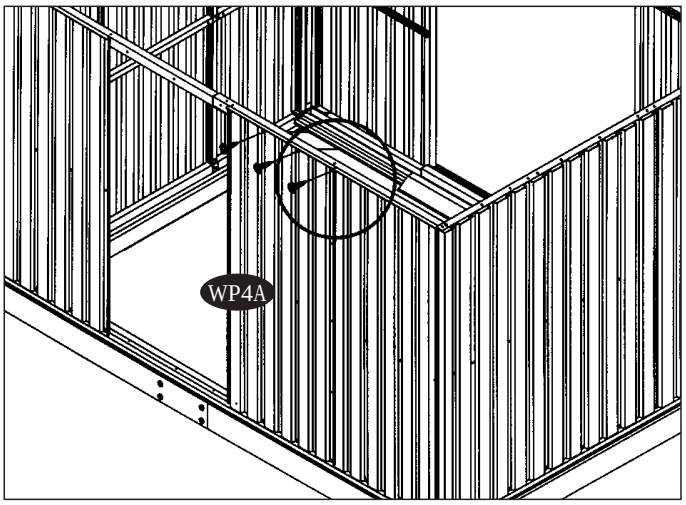

IMPORTANT: USE HAND GLOVES TO PREVENT INJURY.

61. Fix two Column fitting (CFP) with Column to the back base bar with (S1) screws from inside.

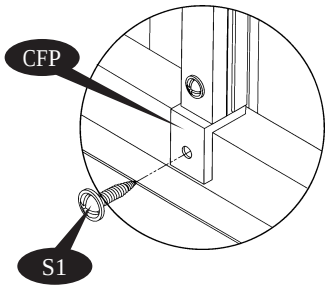

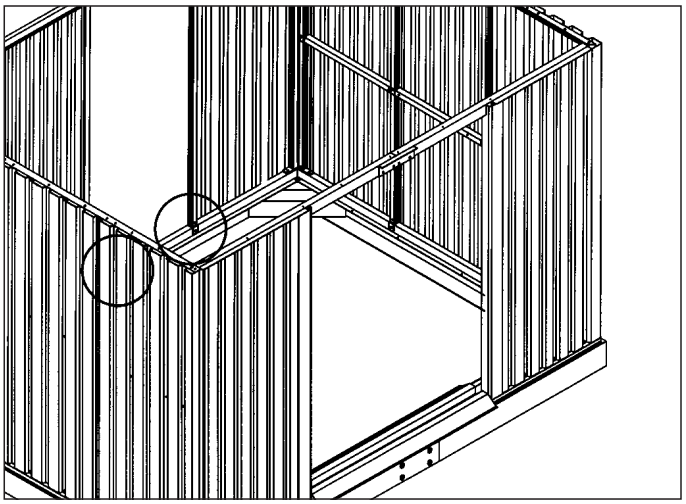

62. Place the Wall Panel (WP4A) on the base bar back. Line up the holes with base bar. Secure the Panel at bottom with (S1) screws to the base bar from out side.

Tip

First fix the middle screws (top or bottom) then go to the edges.

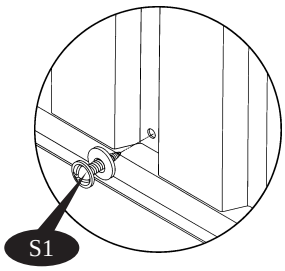

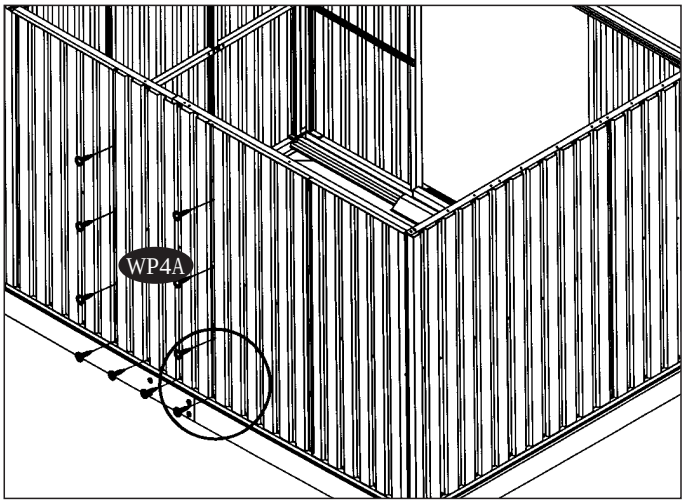

63. Insert the Ventilation Blocking Cover (VBCF) in between the top angle and the wall panel. Line up the holes with the top angle & secure with (S1) screws.

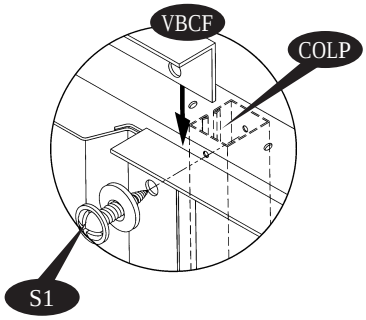

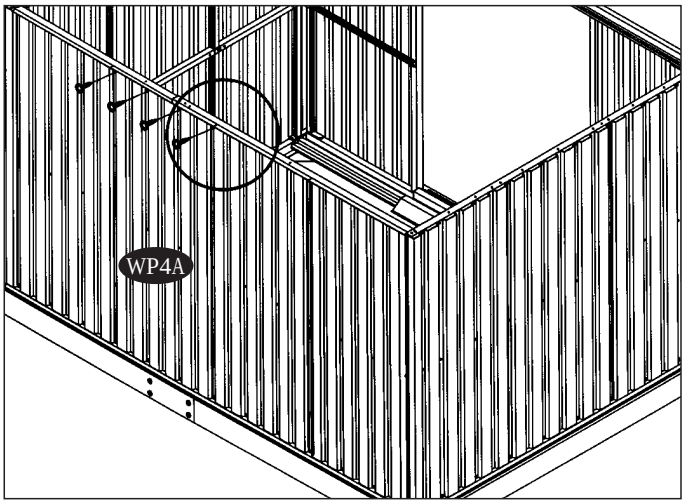

IMPORTANT: USE HAND GLOVES TO PREVENT INJURY.

64. Fix the Center band fitting (CBFP) on the Columns with (S1) screw.

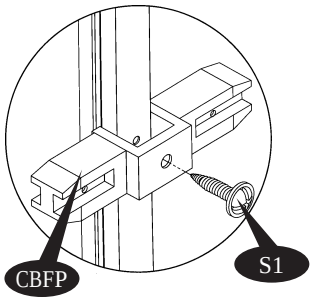

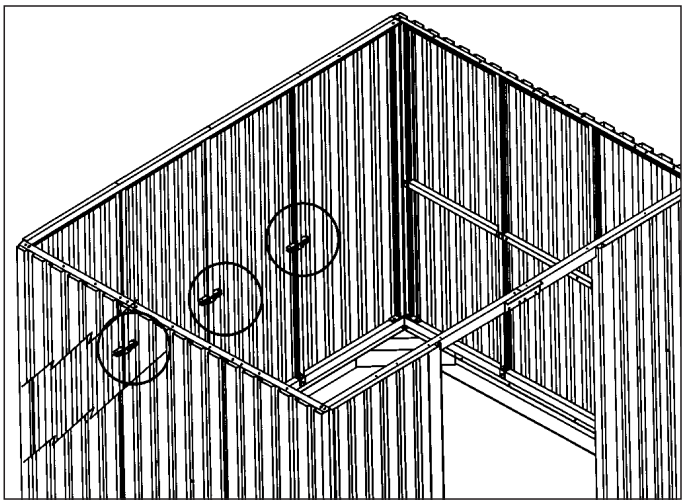

65. Fix the Column fittings (CFP) to the Column as shown.

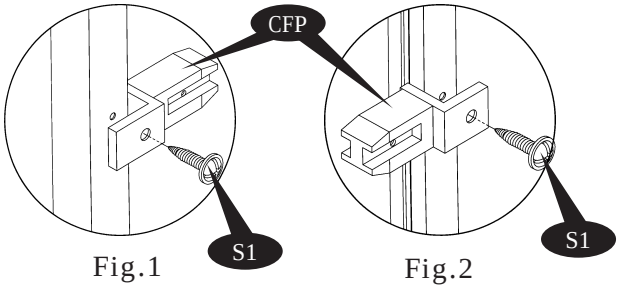

Fig.1 Fig.2

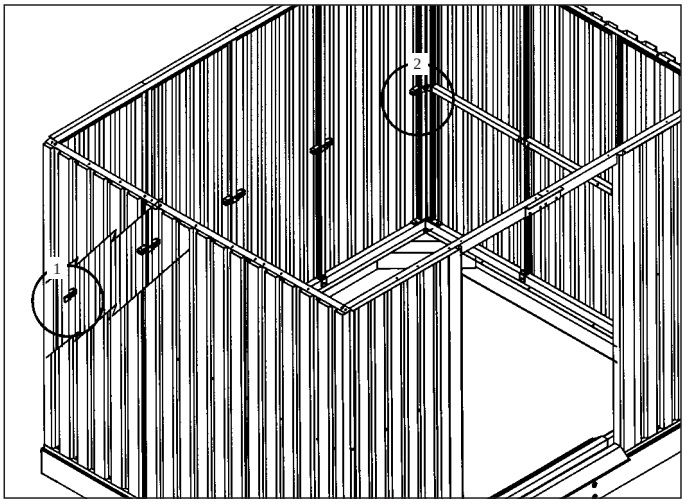

66. Fix the Center Band (CB4P) with (S1) screws to the Center Band fitting and column fitting.

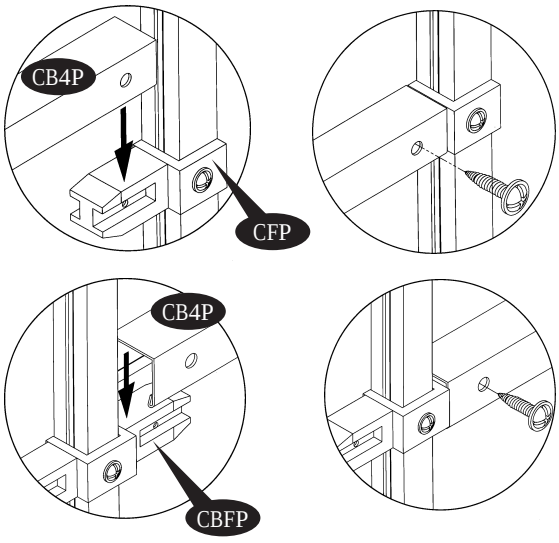

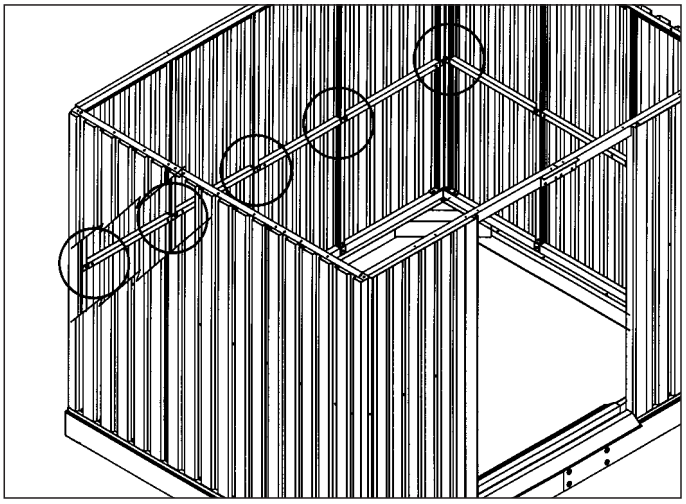

IMPORTANT: USE HAND GLOVES TO PREVENT INJURY.

67. Secure the Panels to the Center bands with (S1) screws with washer from out side.

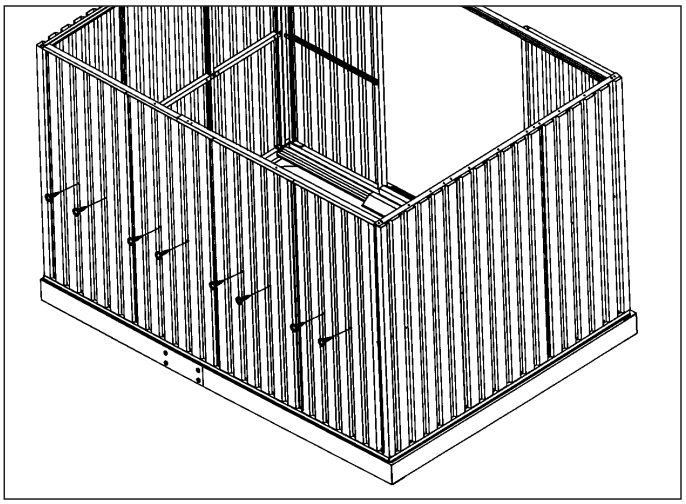

68. Place the sliding channel cover (SCBP) on sliding channel and secure with (S7) screws.

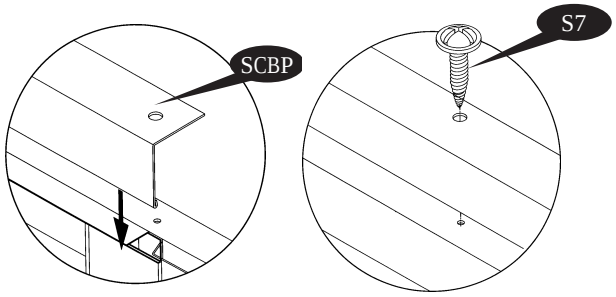

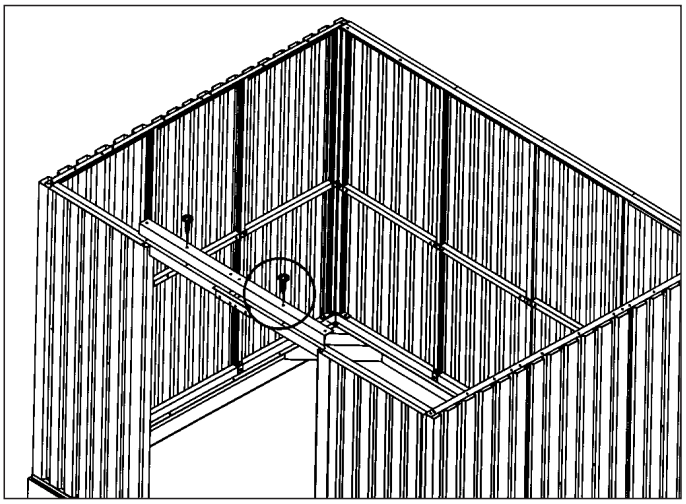

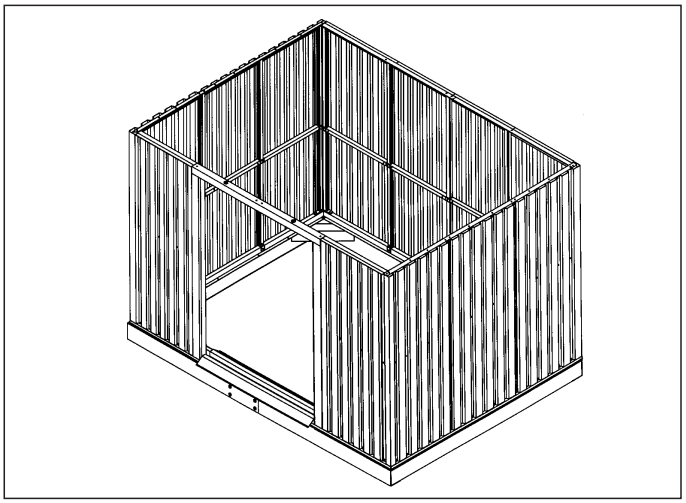

IMPORTANT: USE HAND GLOVES TO PREVENT INJURY.

C. Roof

Note *All parts are clearly marked and care should be taken to use the correct one.*

Parts Needed:

(2)	Support bracket front right / back left	(SB1BP)	(2)	Roof flashing	(RF2BP)
(2)	Support bracket front left / back right	(SB2BP)	(2)	Roof flashing	(RF3BP)
(2)	Support bracket long - front right / back left	(SB3BP)	(2)	Roof flashing	(RF4BP)
(2)	Support bracket long - front left / back right	(SB4BP)	(2)	Facia panel left	(FLBP)
(8)	Facia bracket support	(FBS)	(2)	Facia panel right	(FRBP)
(2)	Facia support left	(FSLBP)	(4)	Top corner	(TC)
(2)	Facia support right	(FSRBP)	(2)	Ridge end cap	(FC)
(4)	Roof support	(RSBP)	(92)	Plastic washer	(PW)
(4)	Roof structure	(RS4BP)	(48)	Roof plug with washer	(PPG)
(2)	Roof panel	(RP1BP)	(48)	Roof pin	(PIN)
(1)	Roof panel	(RP2BP)	(4)	Ventilation Blocking Cover Side-1	(VBCS1)
(2)	Roof panel	(RP3BP)	(2)	Ventilation Blocking Cover Side-2	(VBCS2)
(1)	Roof panel	(RP2BG)	(134)	Sheet metal screw	(S1)
(1)	Roof panel window	(RPWG)	(44)	Machine screw with nut	(S3)
(1)	Ridge cover	(RC1P)			
(2)	Ridge cover	(RC2P)			
(2)	Roof flashing	(RF1BP)			

1. Assemble the support bracket (SB1BP & SB2BP) with Facia bracket support. Use (S3) bolt & nut. Make 2 Sets

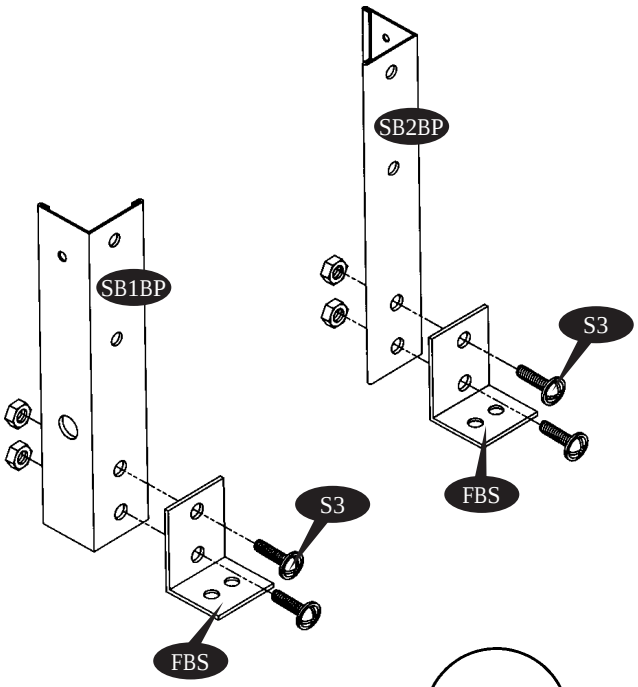

2. Assemble the support bracket with Roof support (RSBP) at both ends as shown. Use (S3) bolt & nut. Make 2 Sets

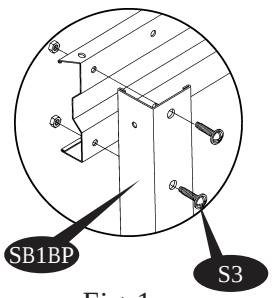

Fig.1

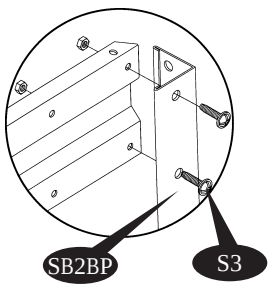

Fig. 2

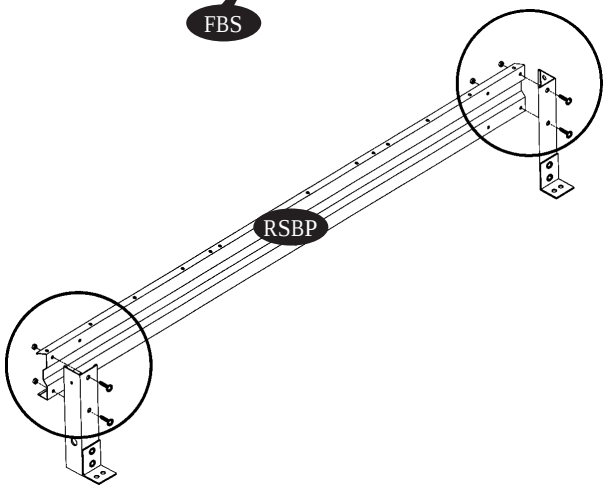

IMPORTANT: USE HAND GLOVES TO PREVENT INJURY.

3. Place the Roof support assembly on top of sliding channel and back top angle. Use (S1) screws to secure.
Make 2 Sets.

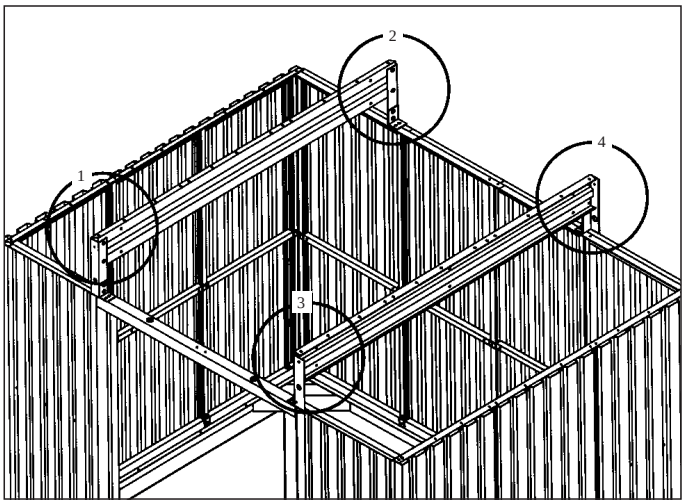

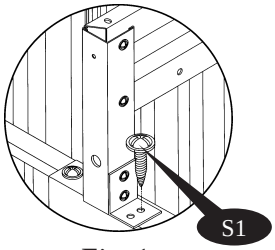

Fig.1

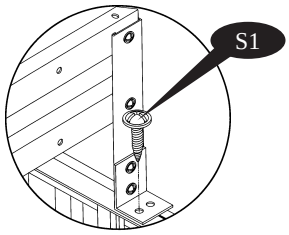

Fig.2

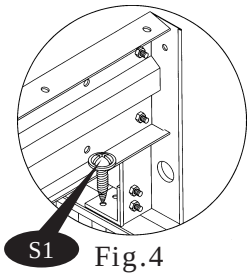

Fig.4

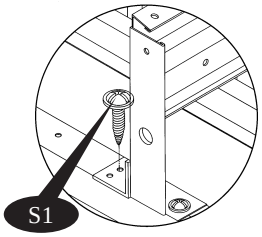

Fig.3

4. Assemble the Support bracket (SB3BP & SB4BP) together with Facia bracket support (FBS). Use (S3) bolt & nut.
Make 2 Sets

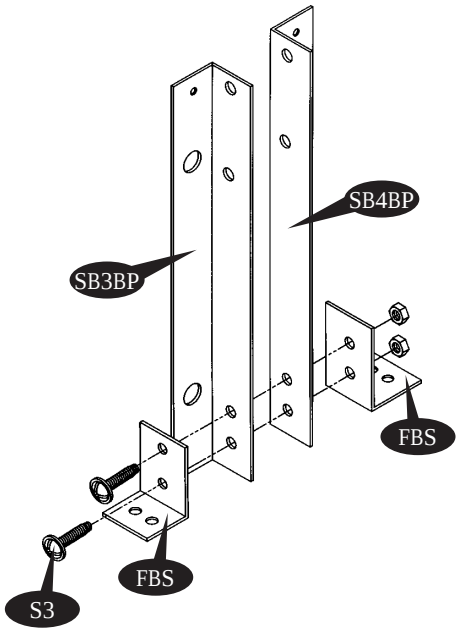

5. Assemble the Support bracket with Roof support (RSBP) as shown. Use (S3) bolt & nut.

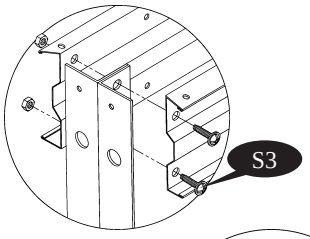

Fig.1

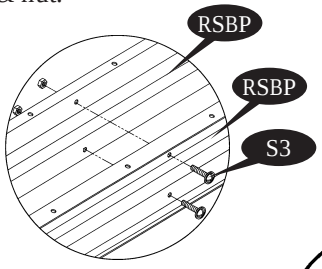

Fig.2

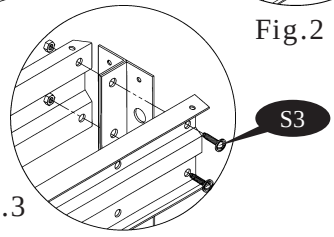

Fig.3

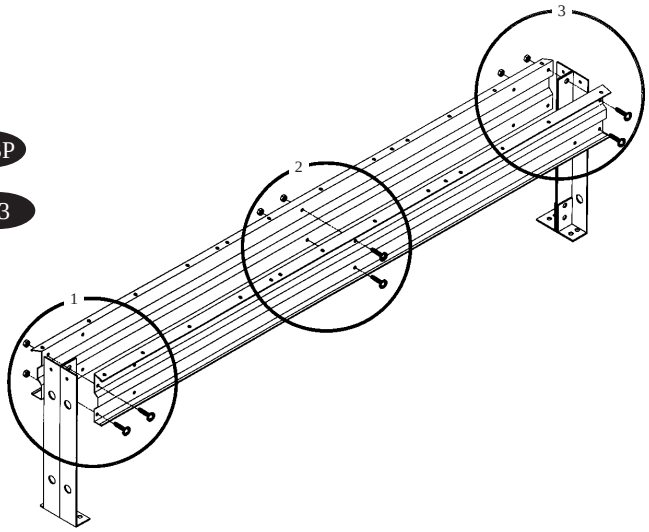

IMPORTANT: USE HAND GLOVES TO PREVENT INJURY.

6. Place the Roof support assembly on top of the sliding channel and back top angle. Use (S1) screw to secure.

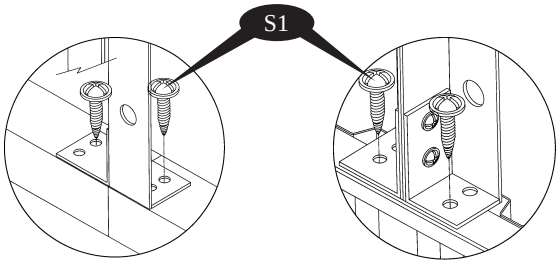

Fig.1 Fig.2

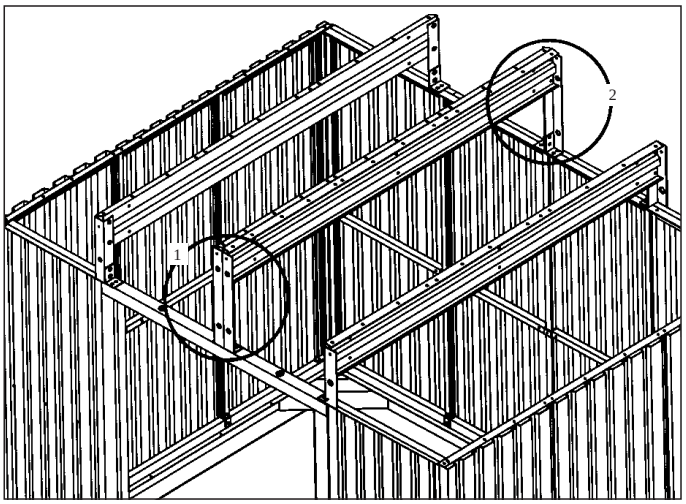

7. Place the Facia support right (FSRBP) on top of Roof support as shown. Secure with (S1) screws to support bracket and top angle side.

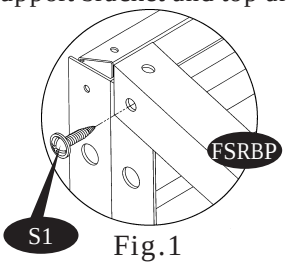

Fig.1

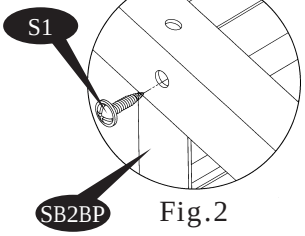

Fig.2

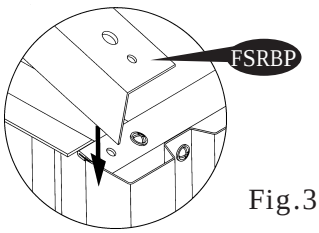

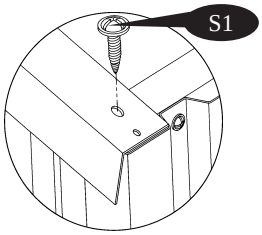

Fig.3

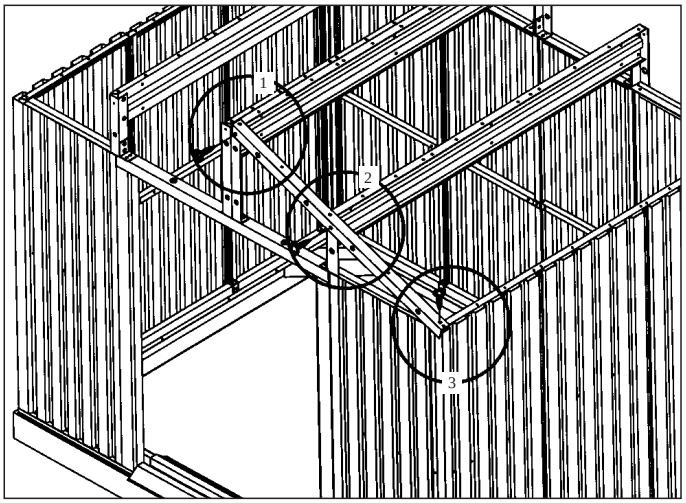

8. Place the Facia support left (FSLBP) on the top of Roof support as shown. Secure with (S1) screw to Support bracket and top angle side.

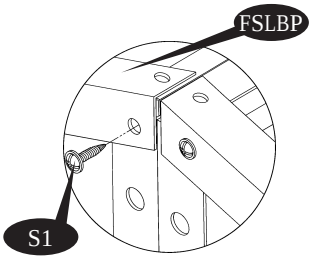

Fig.1

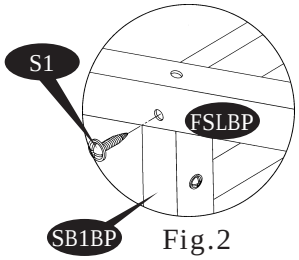

Fig.2

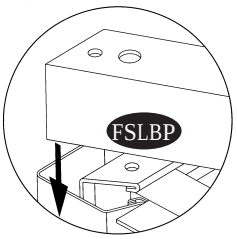

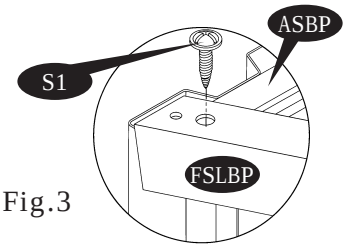

Fig.3

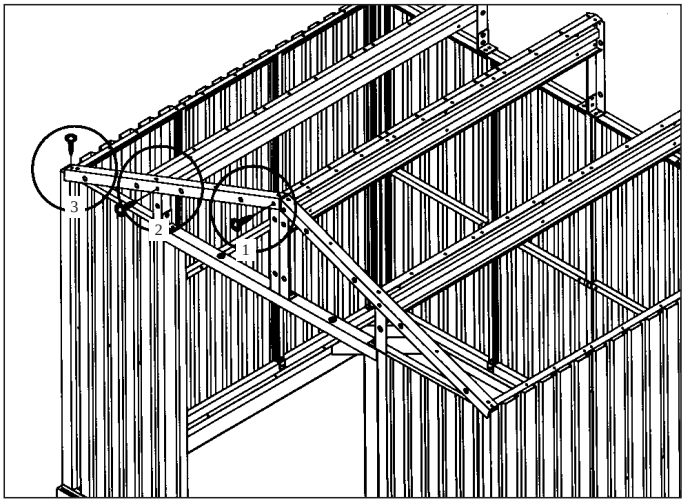

IMPORTANT: USE HAND GLOVES TO PREVENT INJURY.

9. Place the Facia support left (FSLBP & FSRBP) on the top of Roof support as shown. Secure with (S1) screws to Support bracket and top angle side.

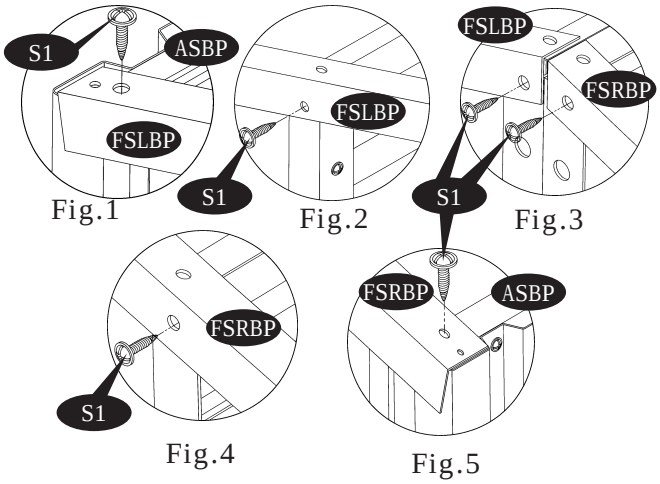

Fig.1 Fig.2 Fig.3

Fig.4 Fig.5

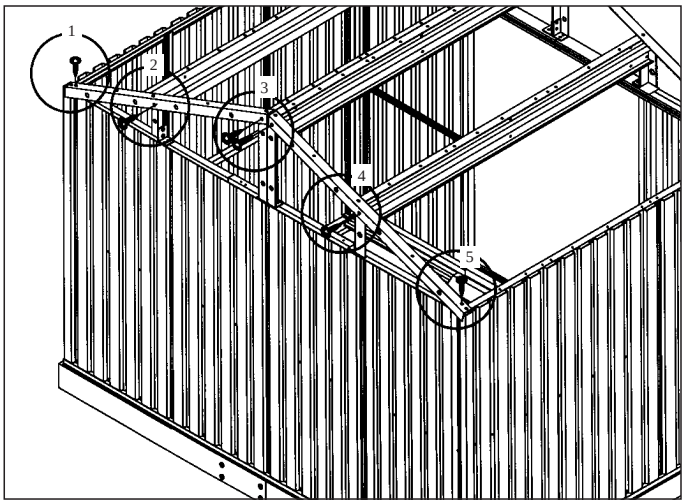

10. Place the Roof Structure (RS4BP) on the top of Roof support and top angle side. Secure with (S1) screws to the top angle and Roof support as shown in Fig. 1,2,3 & 4.

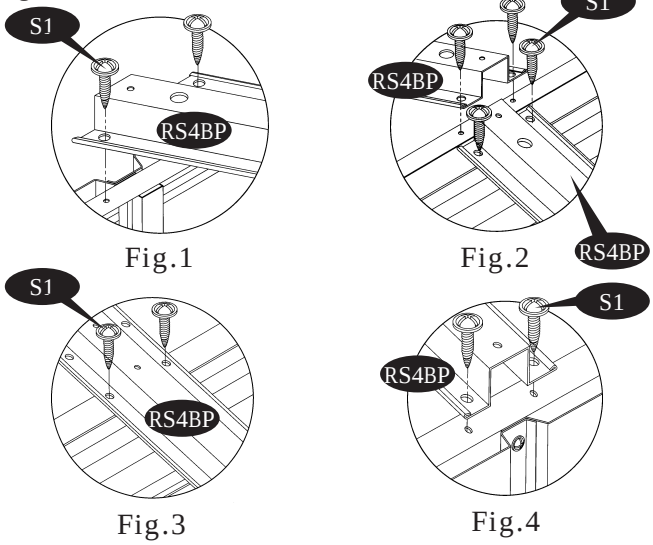

Fig.1 Fig.2

Fig.3 Fig.4

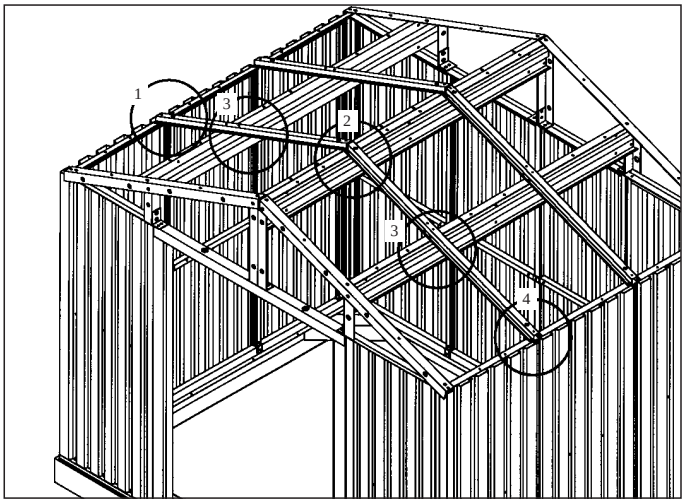

11. Place the Hinges Support (HS) to the roof structure (RS4BP) and secure with (S1) screws. See fig.

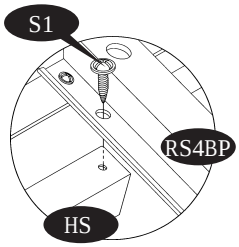

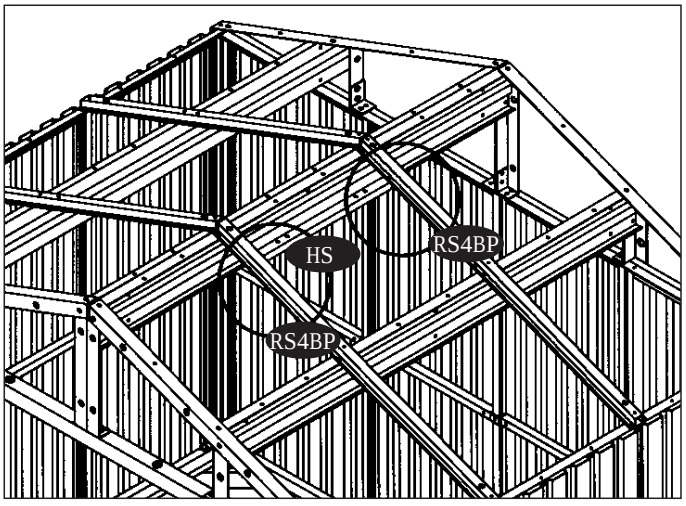

IMPORTANT: USE HAND GLOVES TO PREVENT INJURY.

12. Place the Facia panel (FRBP) on Facia support at right side. Line up the holes with Facia support and fix the Roof plug with washer use a hammer (rubber mallet) to drive in roof pin.

TIP

First insert all roof plugs with washers (Left & Right) then drive in the roof pins.

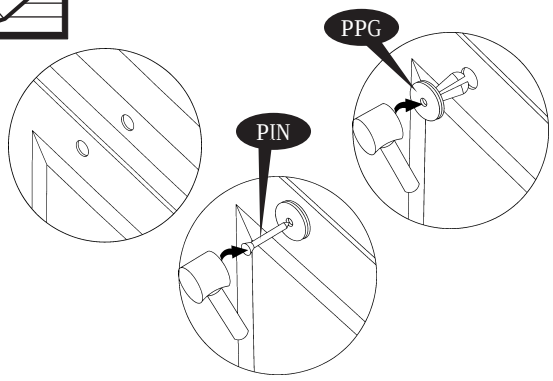

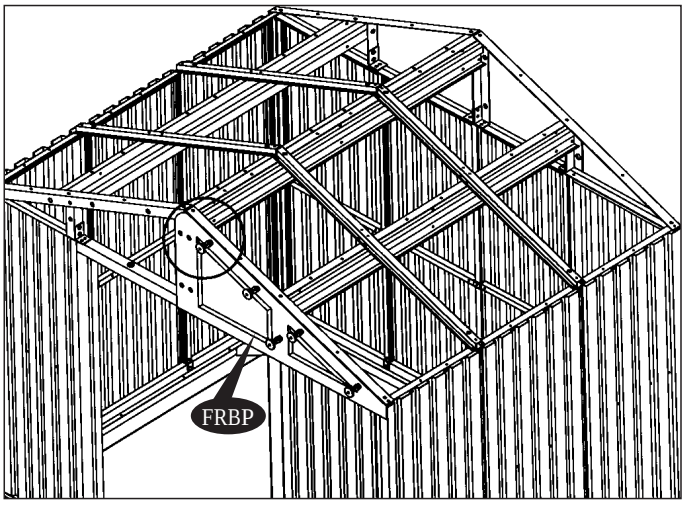

13. Place the Facia panel (FLBP) at left side and continue the same.

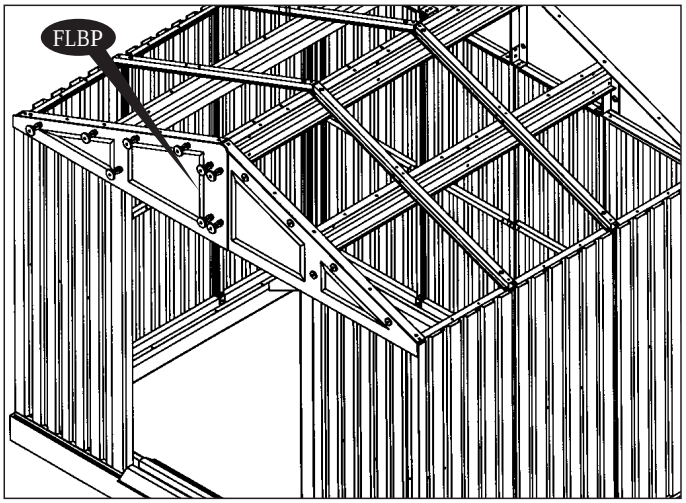

14. Place the Facia panel (FLBP) on back side left facia support and fix the Roof plugs with washer and drive in roof pins.

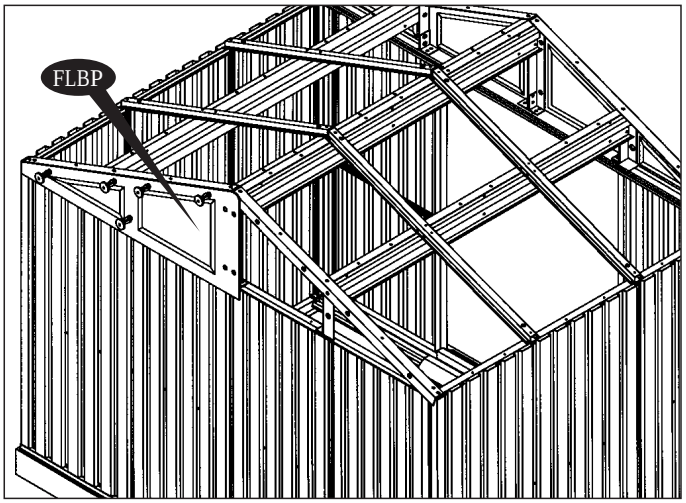

IMPORTANT: USE HAND GLOVES TO PREVENT INJURY.

15. Place the Facia panel (FRBP) on back side right Facia support and fix the roof plugs with washer and drive in roof pins.

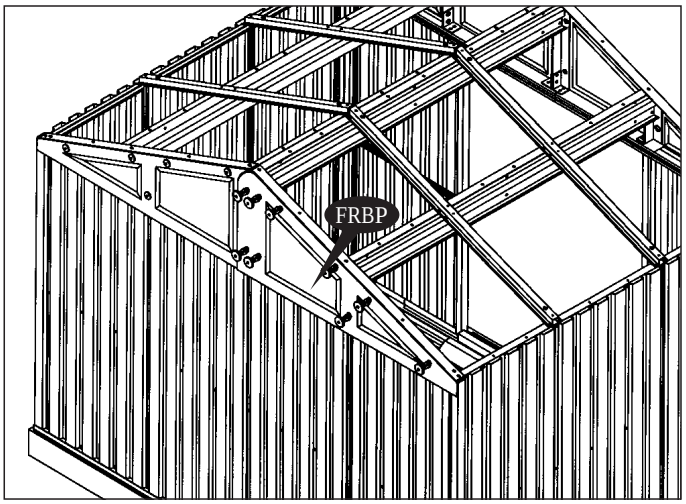

16. Place the Roof panel (RP3BP) on top of the Roof support and Facia support. Line up the holes and secure with (S1) screws with washer.

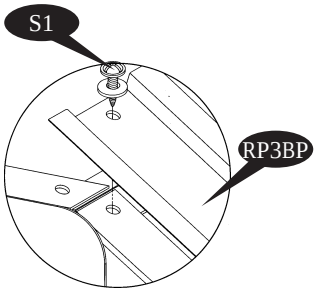

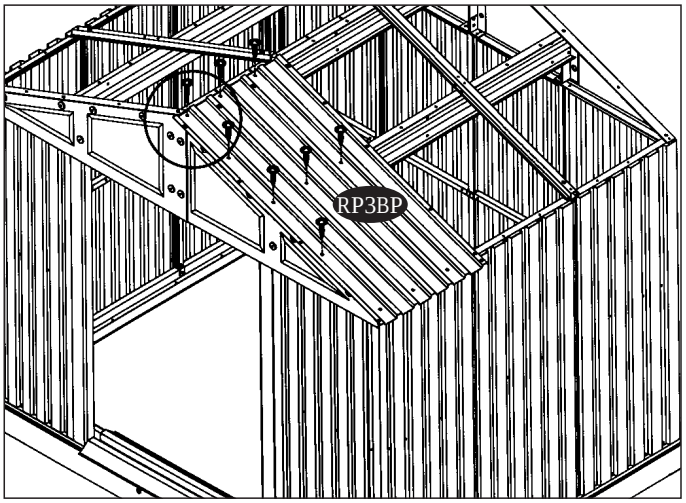

17. Place the Roof panel (RP2BG) on the Roof support and secure with (S1) screws with washer.

Note

Make sure the overlapping position for roof panel is as shown in blow up

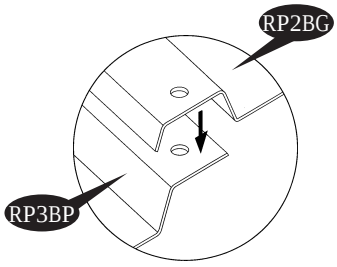

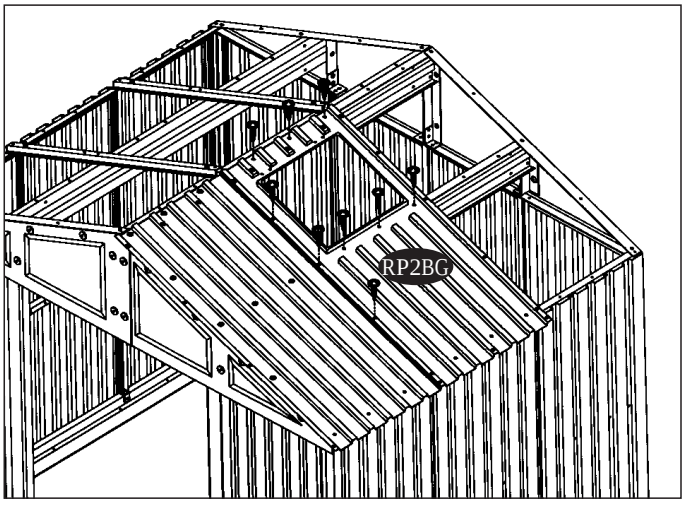

IMPORTANT: USE HAND GLOVES TO PREVENT INJURY.

18. Place the Height Adjustable Support (HAS) to the roof structure (RSBP) and secure with (S1) screws. see fig.

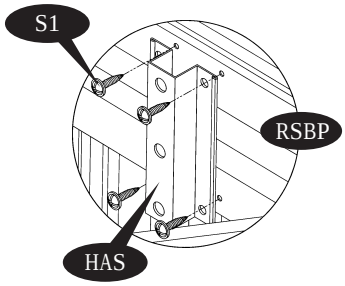

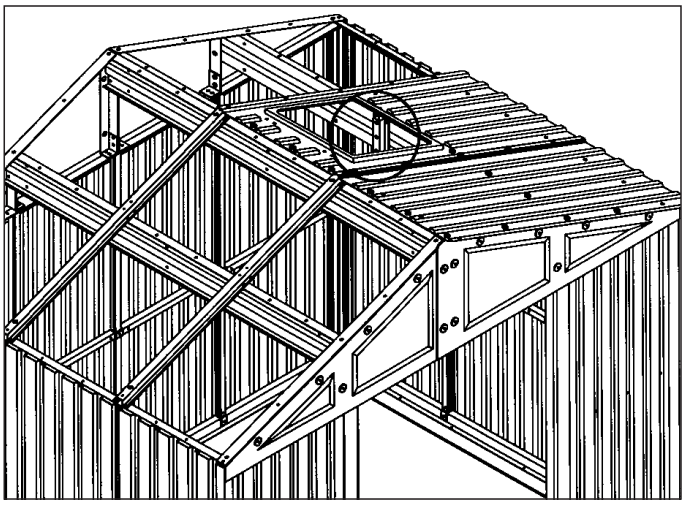

19. Place the Roof Panel Window (RPWG) on top of the Roof Panel (RP2BG). Fix the hinges through the roof panel to Hinges Support (HS) with (S1) screws see fig.

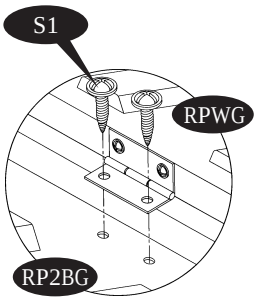

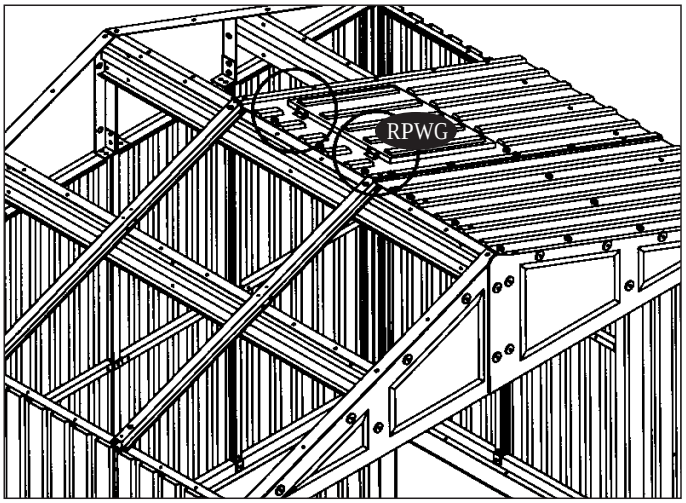

20. Insert the Hook (WHG) to the Roof Panel Window (RPWG) see fig. 1.

For open the window, lift the Hook (WHG) and insert the Height Adjustable Support (HAS) see fig. 2.

For Locking the window, insert the Hook (WHG) to the roof structure (RSBP) see fig. 3.

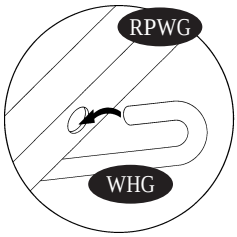

Fig.1

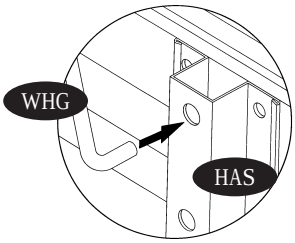

Fig.2

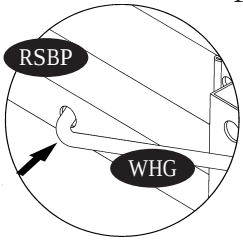

Fig.3

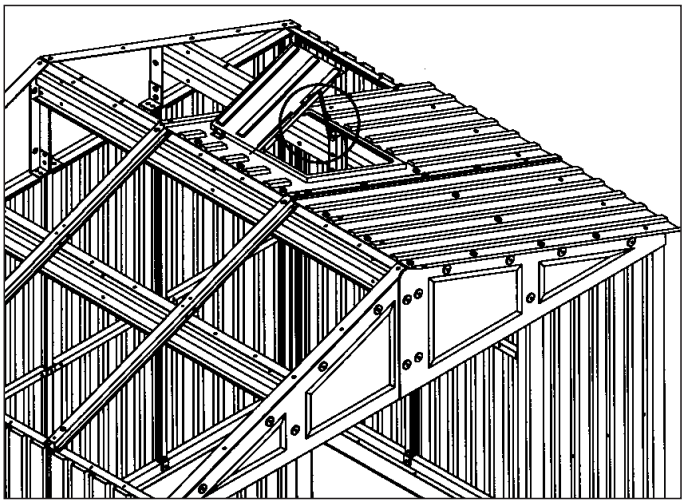

IMPORTANT: USE HAND GLOVES TO PREVENT INJURY.

21. Place the Roof panel (RP1BP) on top of the Roof support and Facia support. Line up the holes and secure with (S1) screws with washer.

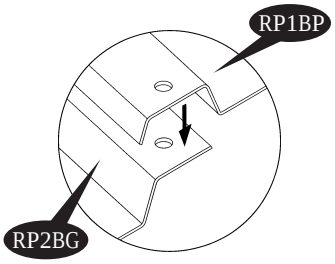

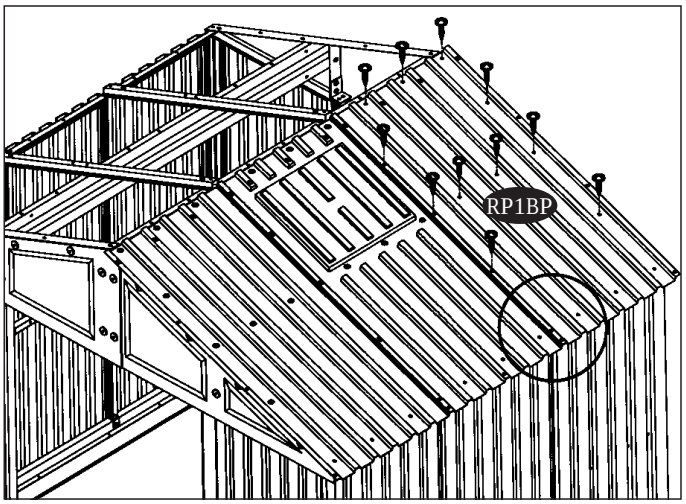

22. Place the Roof panel (RP3BP) on the Roof support and secure with (S1) screws with washers

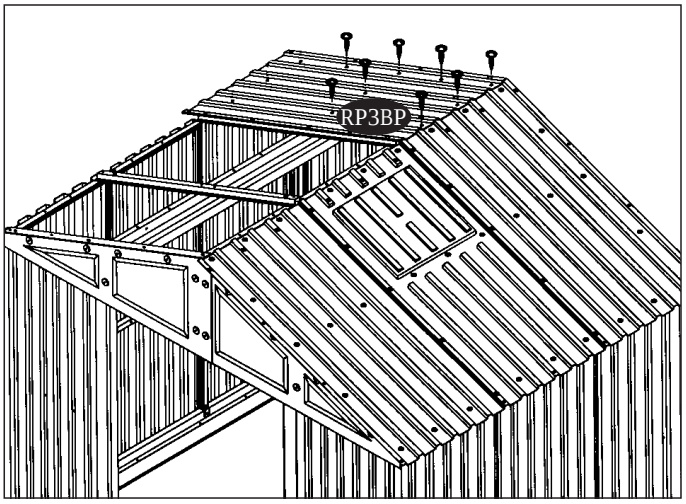

23. Place the ridge cover (RC1P) on top of Roof panel and fix with Roof plug with washer and drive in Roof Pins.

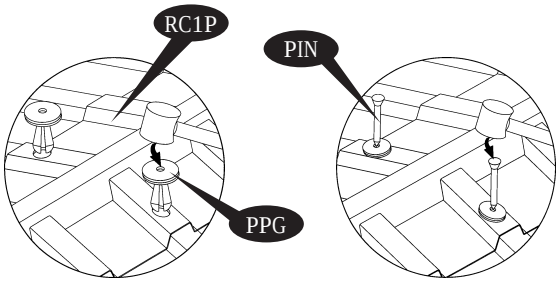

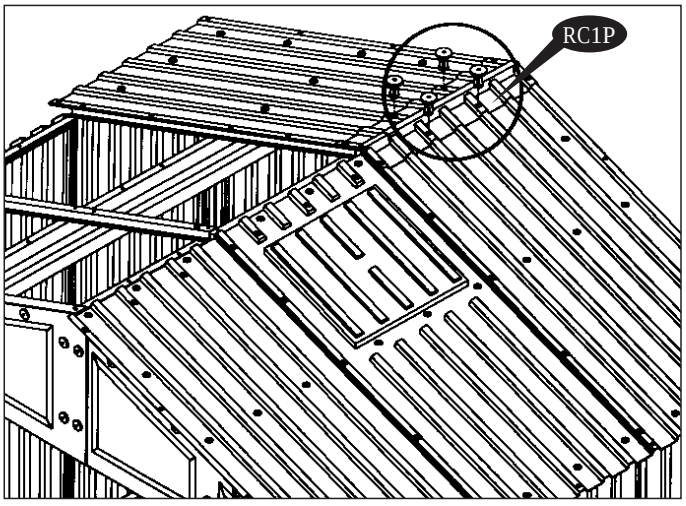

IMPORTANT: USE HAND GLOVES TO PREVENT INJURY.

24. Place the Roof panel (RP2BP) by sliding under the Ridge cover (RC1P) to Roof support. Use (S1) screws with washer to secure.

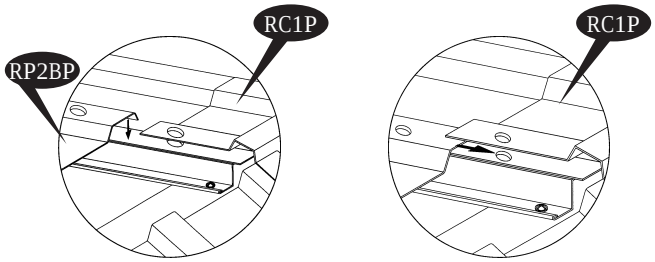

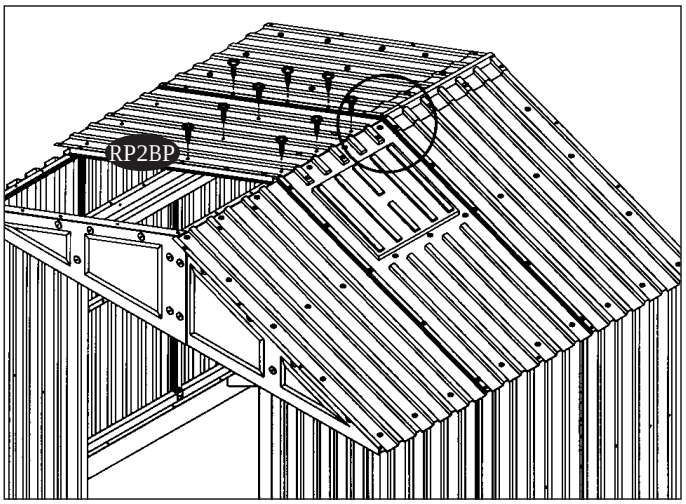

25. Place the Ridge cover (RC2P) on top of Roof panel and fix with Roof plugs with washer and drive in Roof pins.

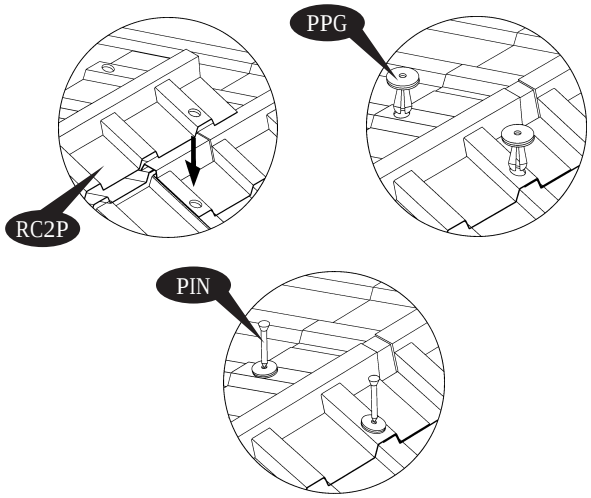

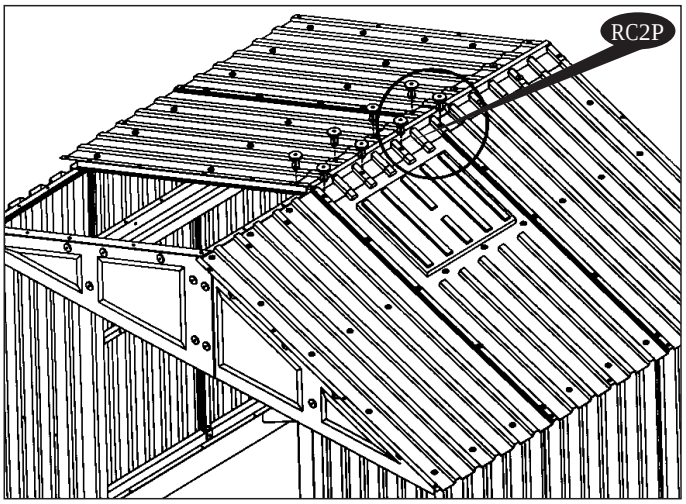

26. Place the Roof panel (RP1BP) by sliding under the Ridge cover (RC2P) to Roof support. Use (S1) screw with washer to secure.

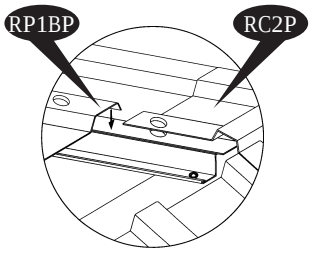

Fig.1

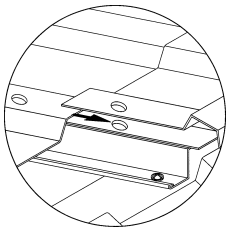

Fig.2

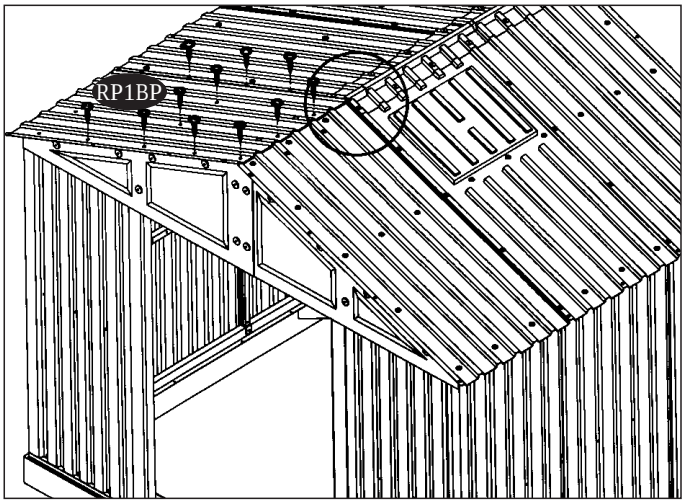

IMPORTANT: USE HAND GLOVES TO PREVENT INJURY.

27. Place the ridge cover (RC2P) on top of Roof panel and fix with Roof plugs with washer and drive in roof pins.

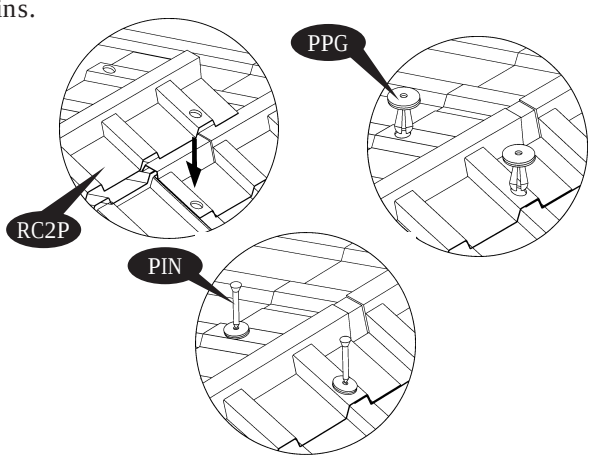

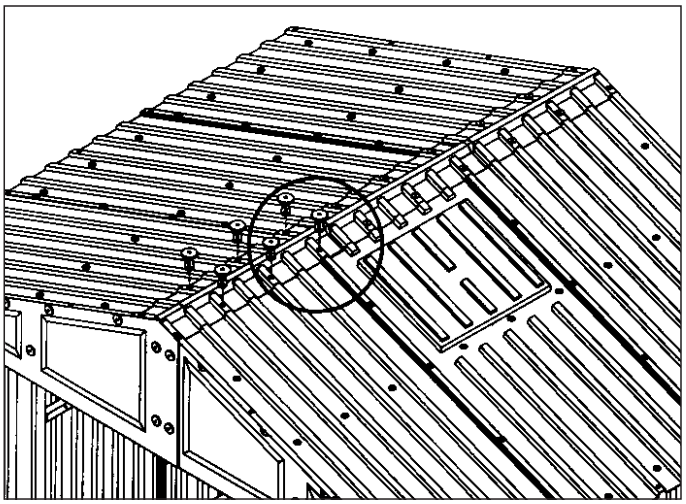

28. Insert the Ventilation Blocking Cover Side (VBCS1) & (VBCS2) in between the roof pannel and the top angle side (ASBP). Line up the holes and secure (S1) screws with washer.

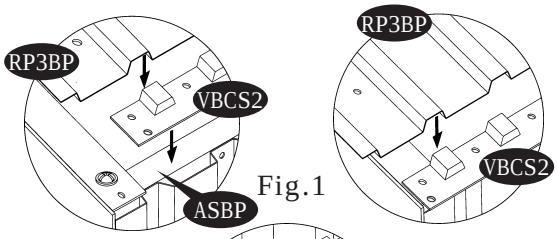

Fig.1

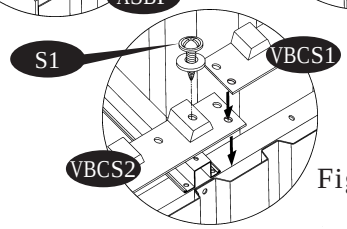

Fig.2

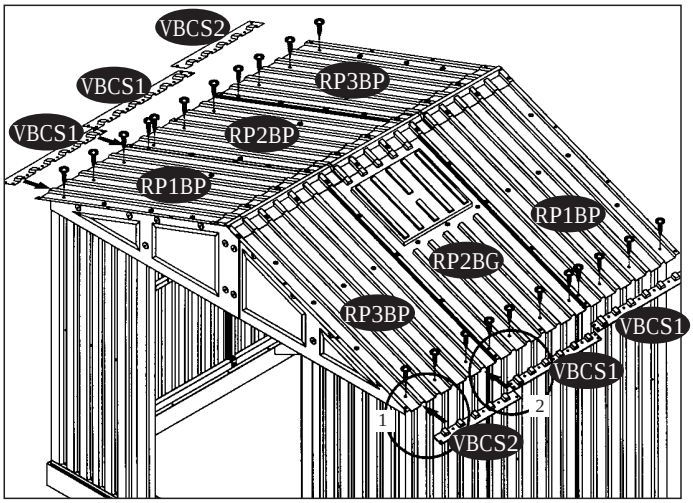

29. Insert the Roof flashing (RF1BP & RF2BP) under the ridge cover. See fig. 1
Line up the holes and fix the roof plug with washer from ridge cover through roof flashing to roof panel drive in the roof pins. See fig. 2 & 3.
Use (S3) bolt & nut to fix the Roof flashing & Roof panel. See fig. 4

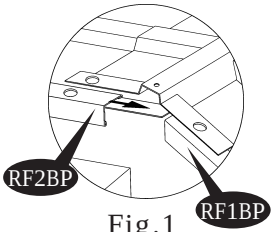

Fig.1

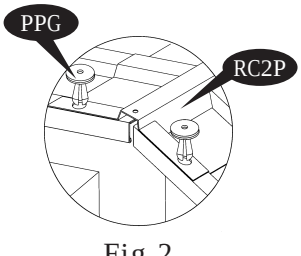

Fig.2

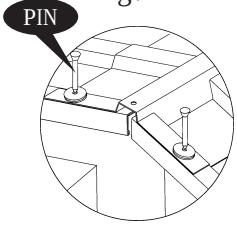

Fig.3

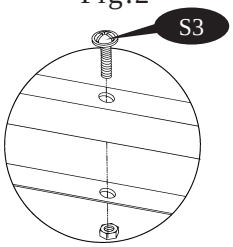

Fig.4

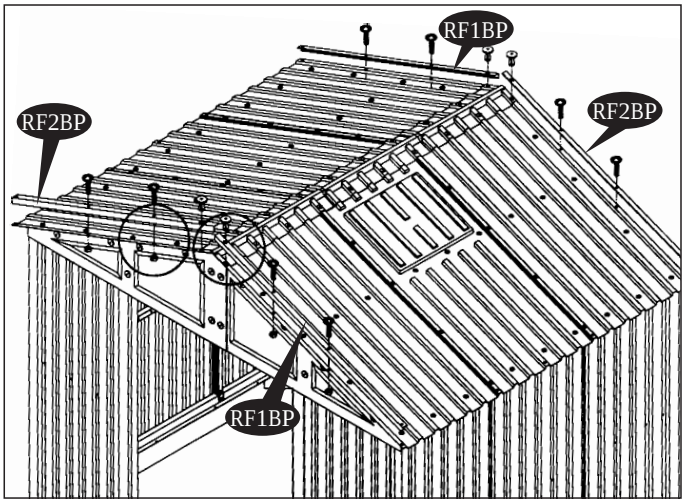

IMPORTANT: USE HAND GLOVES TO PREVENT INJURY.

30. Fix the Roof flashing (RF3BP, RF4BP) at the edge of roof panel with (S3) bolt & nut at both side, see the overlapping on the blow up.

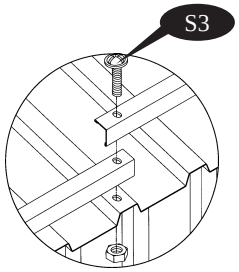

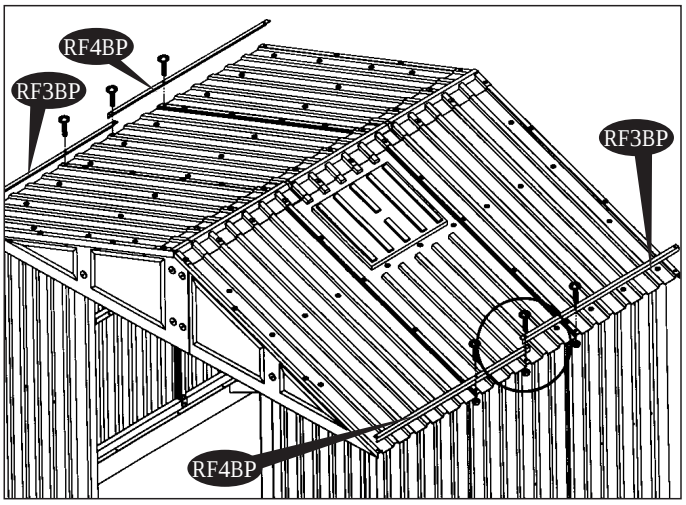

31. Place the Top corner (TC) on the Roof flashing joint and secure with (S3) bolt & nut.

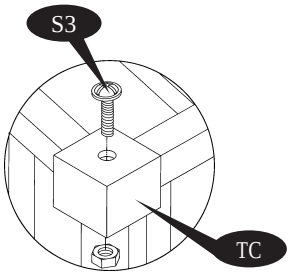

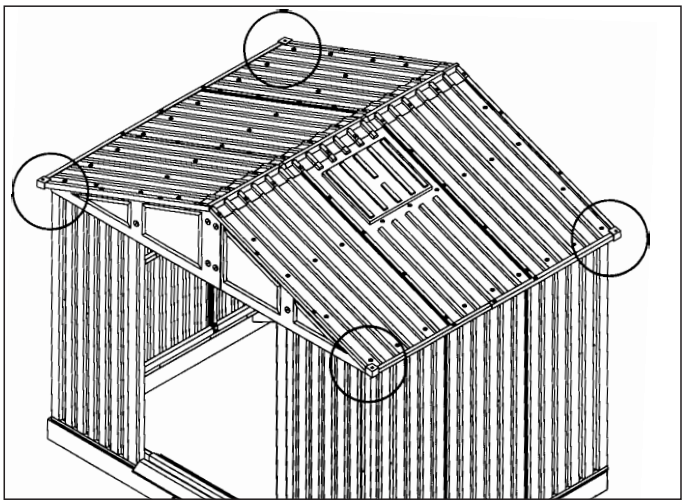

32. Insert the Ridge end cap to the front & back top of the roof and secure with (S1) screws with washer.

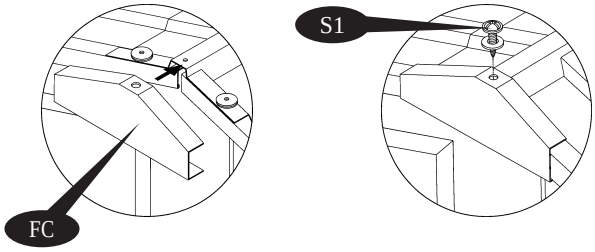

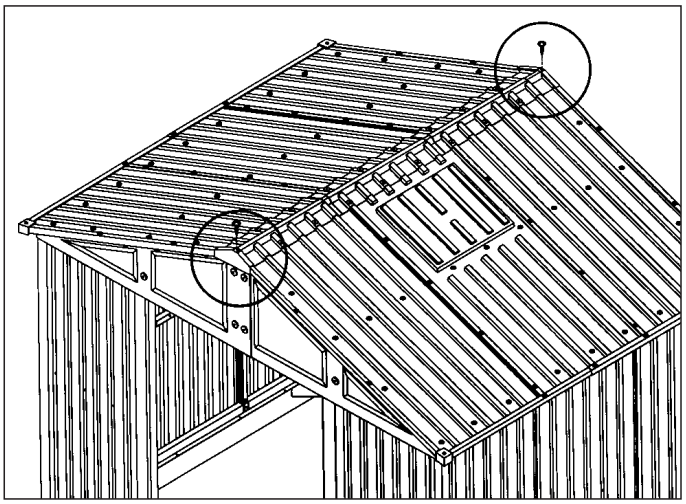

IMPORTANT: USE HAND GLOVES TO PREVENT INJURY.

D. Door

Parts Needed:

(1)	Door panel	(DLBP)
(1)	Door panel	(DRBP)
(2)	Door panel strip top	(DSTBP)
(2)	Door panel strip bottom	(DSBBP)
(2)	Door panel middle support	(DMSBP)
(2)	Door panel vertical support	(DVSP)
(2)	Door stopper vertical	(DSP)

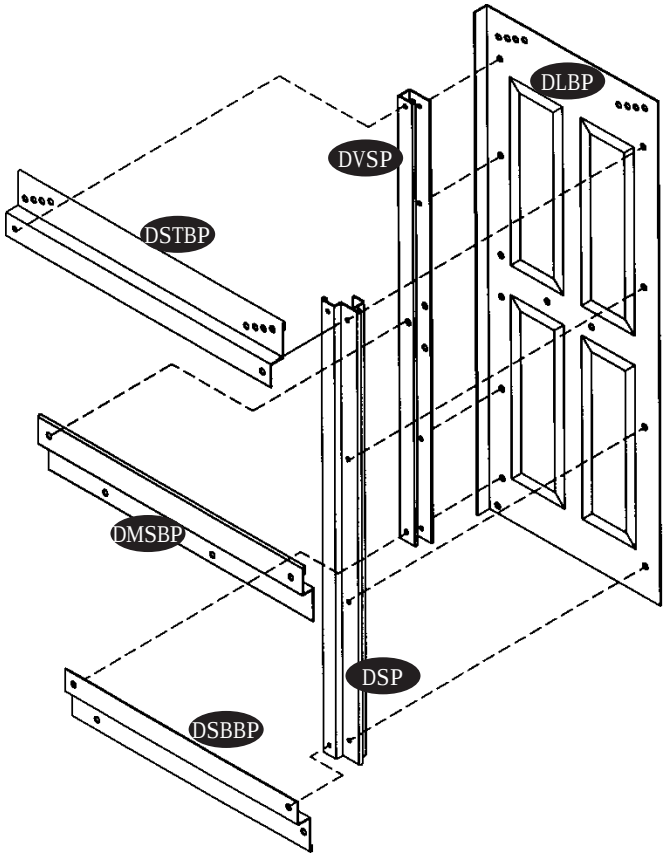

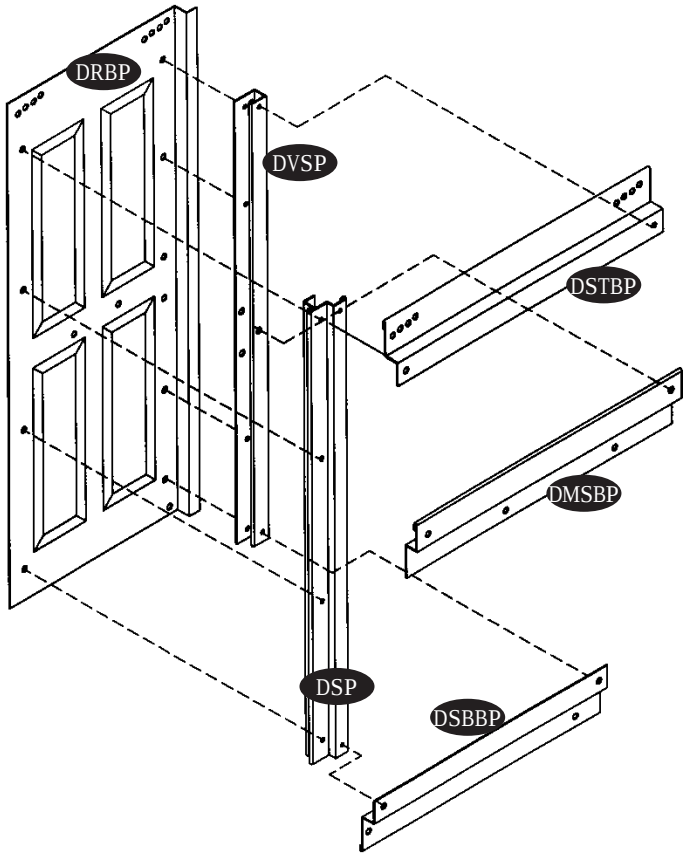

(2)	Door handle	(DH)
(4)	Bottom slider	(DS)
(4)	Sheet metal screw	(S1)
(34)	Sheet metal screw	(S7)
(8)	Machine screw	(S3)
(22)	Plastic washer	(PW)
(18)	Plastic screw cover	(PC)

IMPORTANT: USE HAND GLOVES TO PREVENT INJURY.

Right Door Assembly

1. Place the Door panel vertical support (DVSP) to the Door panel (DRBP) from inside. Secure the panel to the (DVSP) Use (S7) screws with washer from outside.

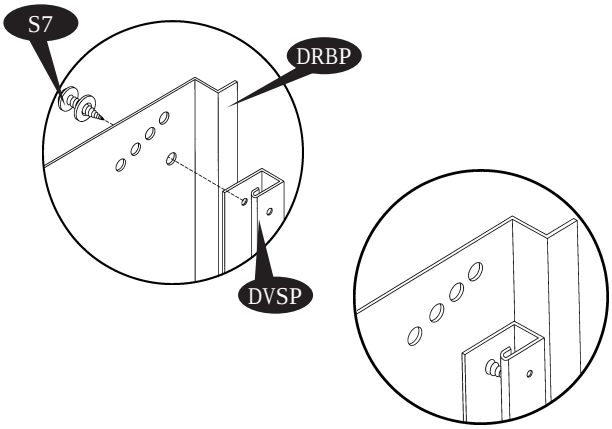

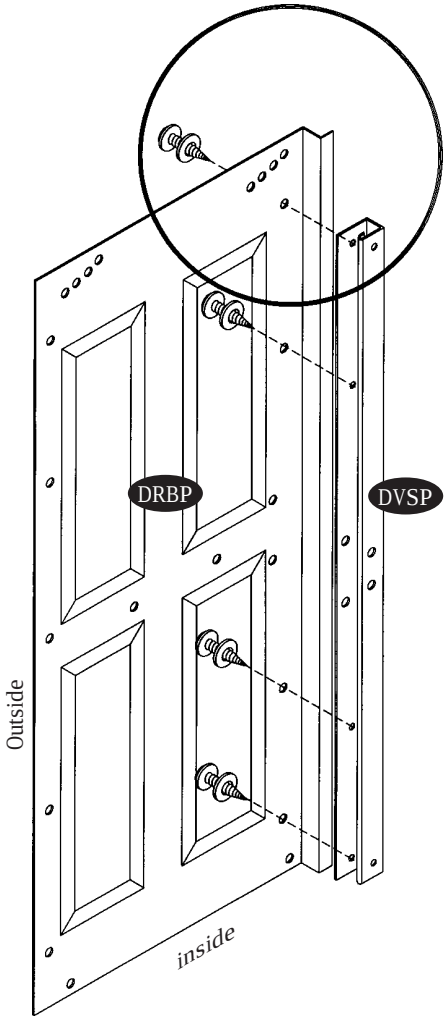

2. Assemble the Door stopper vertical (DSP) to the Door panel (DRBP) make sure the side edge of the panel to be inserted into the door stopper profile (DSP). Secure the stopper with Door panel with (S7) screw as shown in fig.

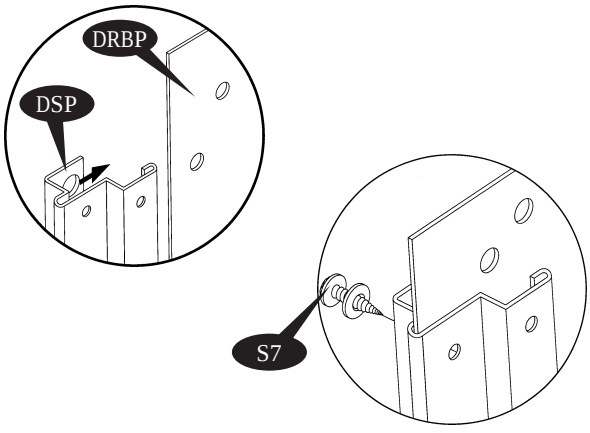

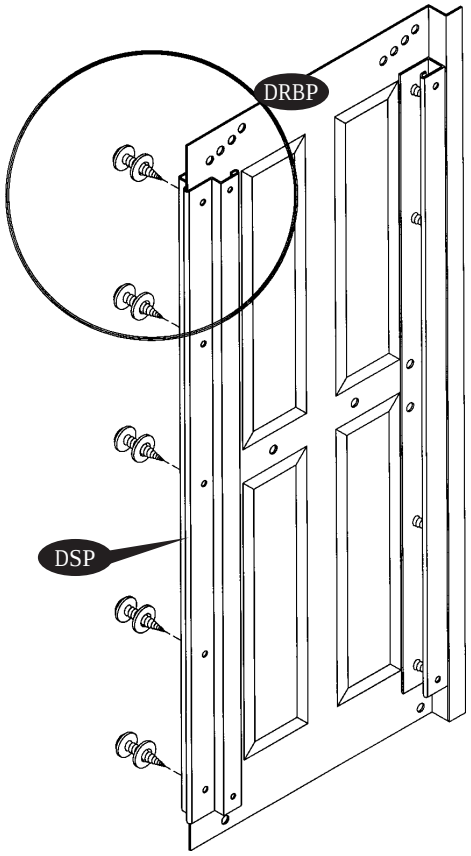

IMPORTANT: USE HAND GLOVES TO PREVENT INJURY.

3. Assemble the Door panel strip top (DSTBP) with Door panel. Make sure the Door panel top edge to be inserted into the (DSTBP). See fig. 1.

Secure the Door panel strip top (DSTAP) with door stopper (DSP) with (S7) screw. See fig. 2.

Secure the (DVSP) with DSTBP use (S7) screw. See fig. 3

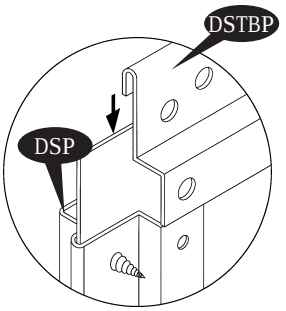

Fig.1

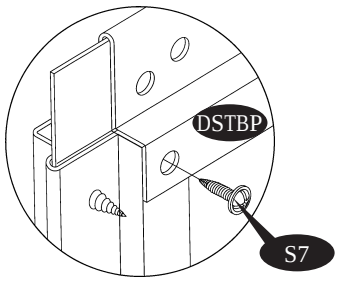

Fig.2

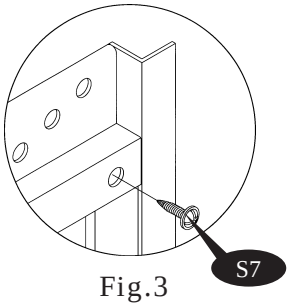

Fig.3

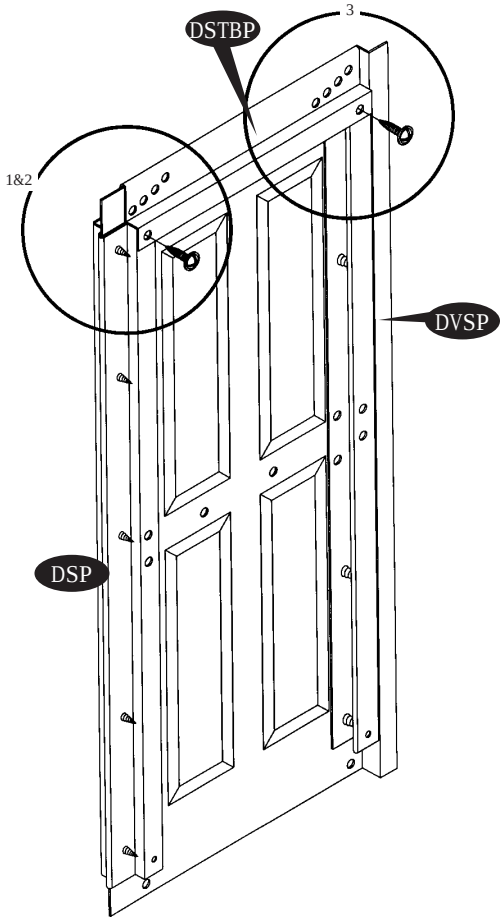

4. Assemble the Door panel strip bottom (DSBBP) with Door panel. Make sure the Door panel bottom edge to be inserted into the (DSBBP). See fig. 1

Secure the strip (DSBBP) with Door stopper (DSP) with (S7) screws. See fig. 2

Secure (DSBBP) with (DVSP) use (S7) screws. See fig. 3

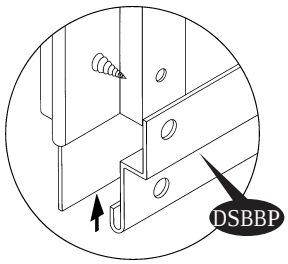

Fig.1

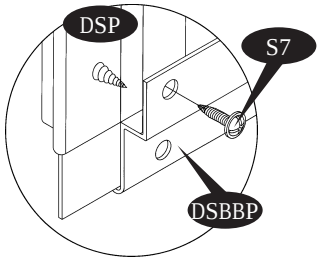

Fig.2

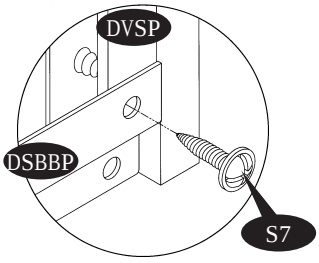

Fig.3

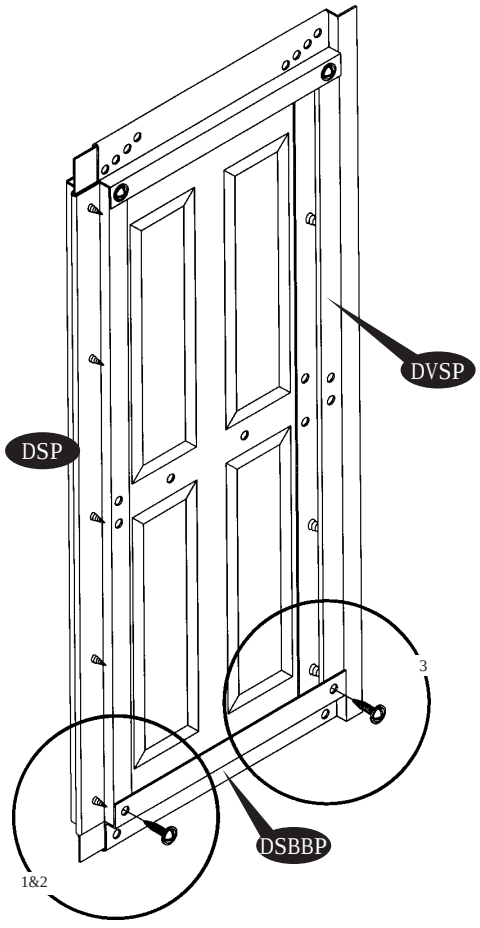

IMPORTANT: USE HAND GLOVES TO PREVENT INJURY.

5. Place the door panel middle support (DMSBP) by sliding in between the (DVSP & DSP) and secure with (S7) Screws.

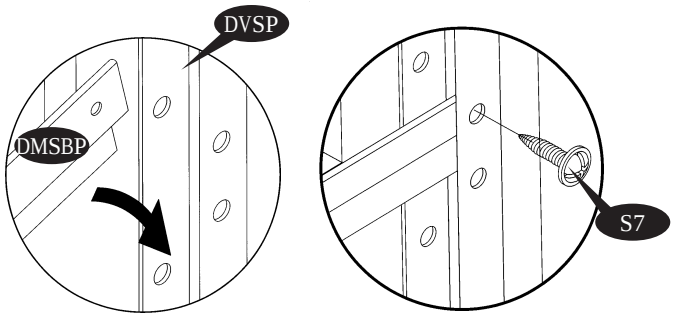

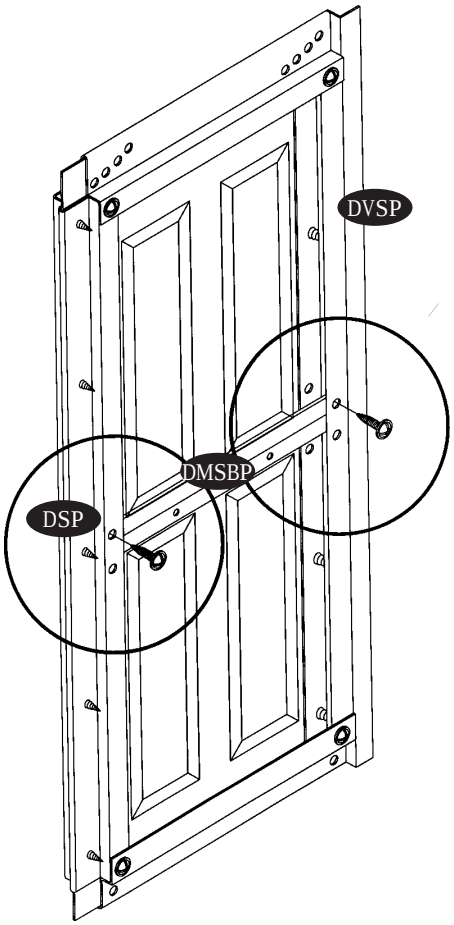

6. Fix the door panel with door panel middle support (DMSBP) with (S7) screws

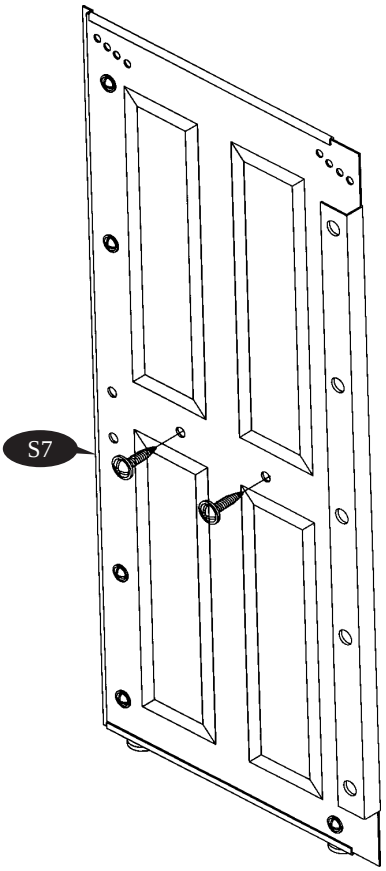

IMPORTANT: USE HAND GLOVES TO PREVENT INJURY.

7. Assemble to bottom slider (BS) to the Door panel. Bottom side at both edge with (S3) bolt and nut with washers.

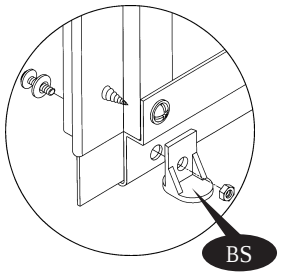

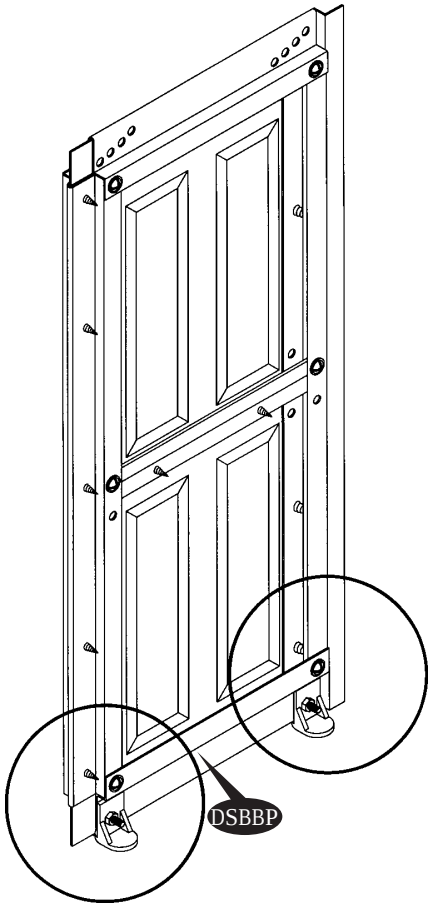

8. Fix the Door handle (DH) with Door panel from front side with bolt & nut.

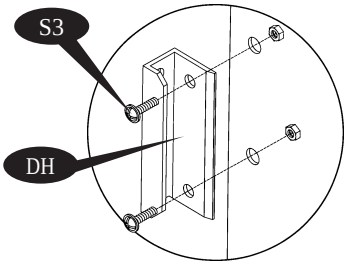

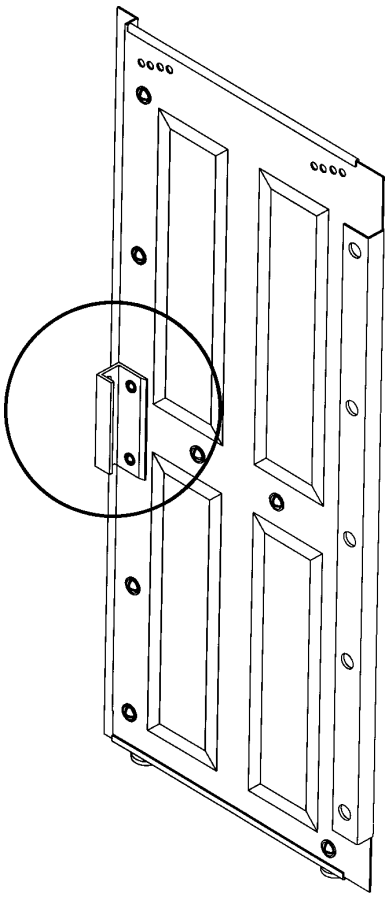

IMPORTANT: USE HAND GLOVES TO PREVENT INJURY.

Left Door Assembly

9. Place the door panel vertical support (DVSP) to the Door panel (DLBP) from inside secure the panel to the (DVSP). Use (S7) screws with washer from out side.

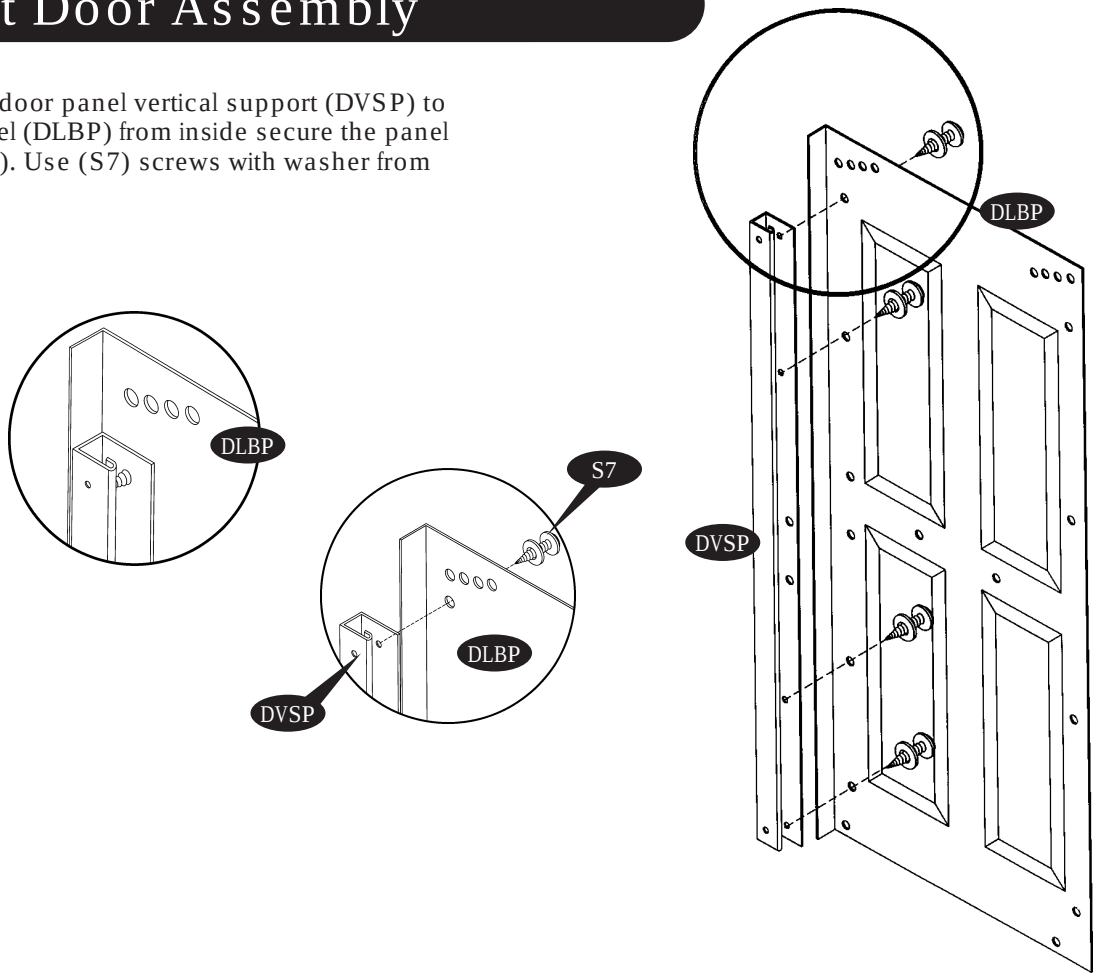

10. Assemble to Door stopper vertical (DSP) to the Door panel (DLBP). Make sure the side edge of the panel to be inserted into the Door stopper profile (DSP). Secure the stopper with Door panel with (S7) screws as shown in fig.

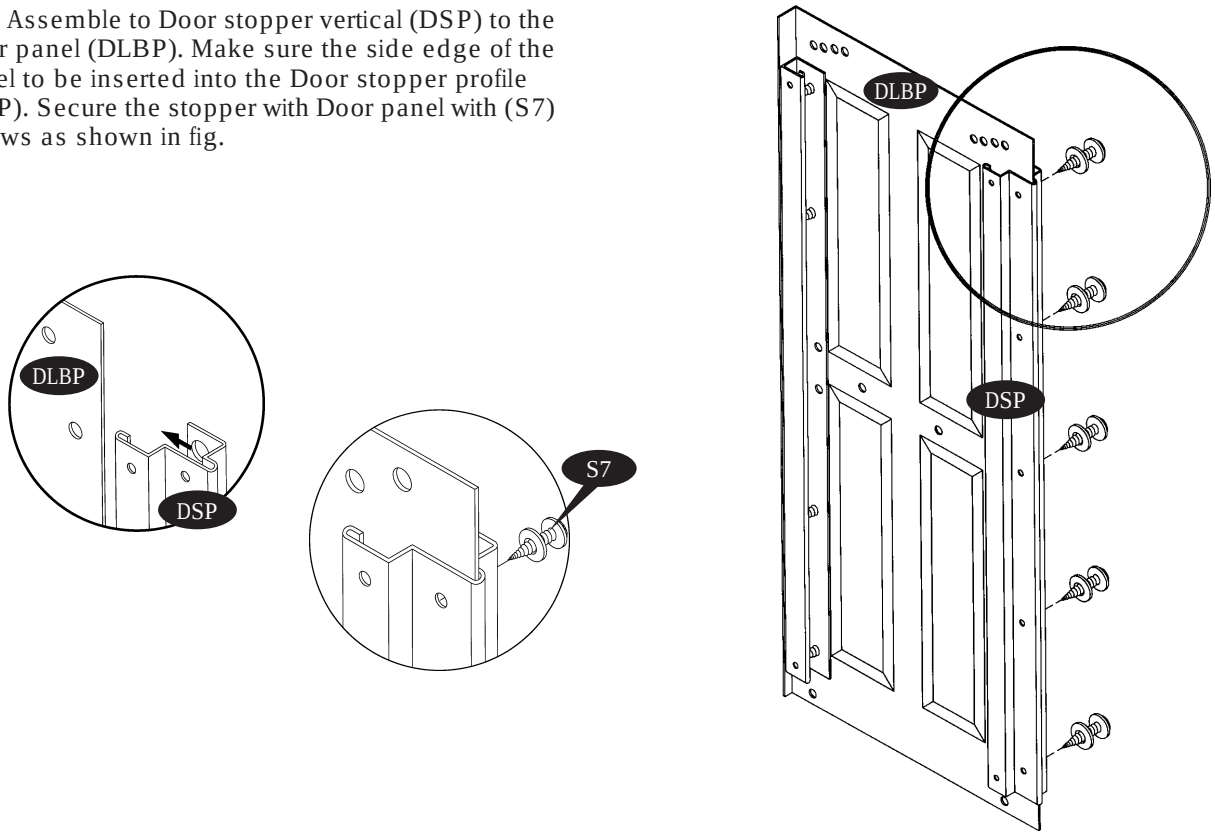

IMPORTANT: USE HAND GLOVES TO PREVENT INJURY.

11. Assemble the Door panel strip top (DSTBP) with Door panel. Make sure the Door panel top edge to be inserted into the (DSTBP).

Secure the Door panel strip top (DSTBP) with Door stopper (DSP) with (S7) screws. See fig. 1&2.

Secure the other end of (DSTBP) with (DVSP) use (S7) screws. See fig. 4.

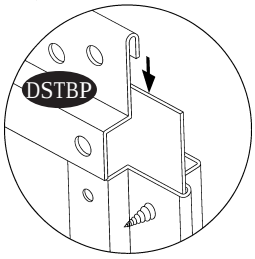

Fig.1

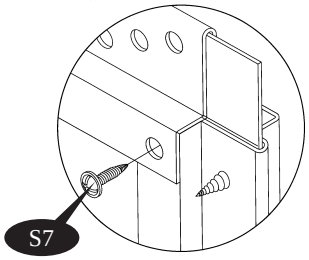

Fig.2

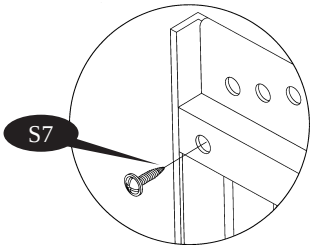

Fig.3

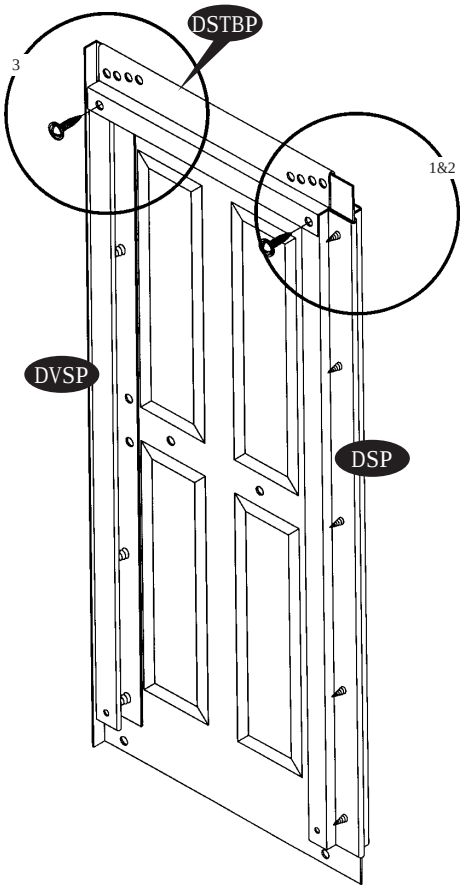

12. Assemble the Door Strip bottom (DSBBP) with Door panel. Make sure the Door bottom edge to be inserted into the (DSBBP).

Secure the Door panel strip bottom (DSBBP) with Door stopper (DSP) with (S7) screws. See fig. 1& 2.

Secure the other end of (DSBBP) with (DVSP) use (S7) screws. See fig. 3.

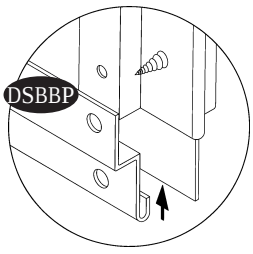

Fig.1

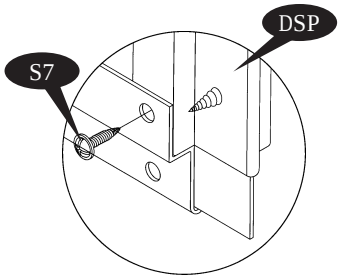

Fig.2

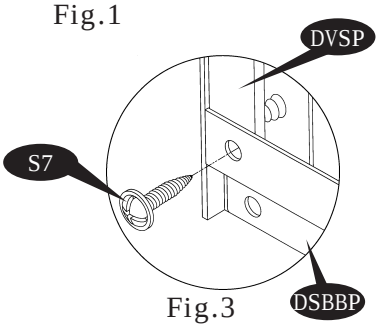

Fig.3

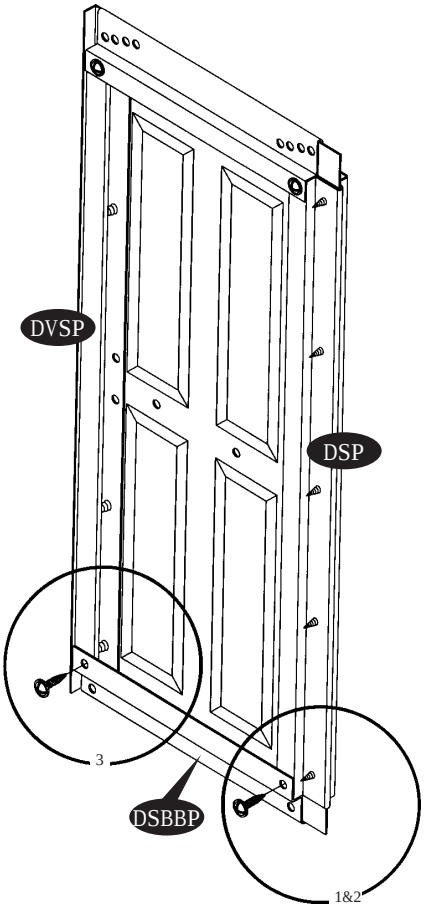

IMPORTANT: USE HAND GLOVES TO PREVENT INJURY.

13. Place the door panel middle support (DMSBP) by sliding in between the (DVSP & DSP) and secure with (S7) screws.

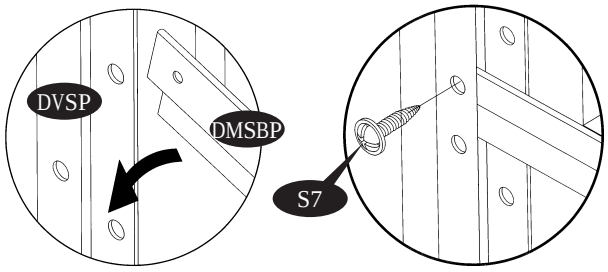

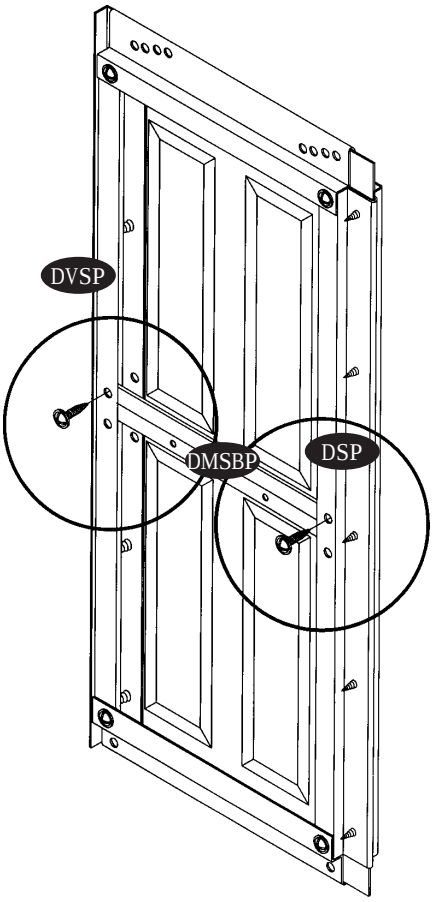

14. Fix the door with door panel middle support (DMSBP) with (S7) screws.

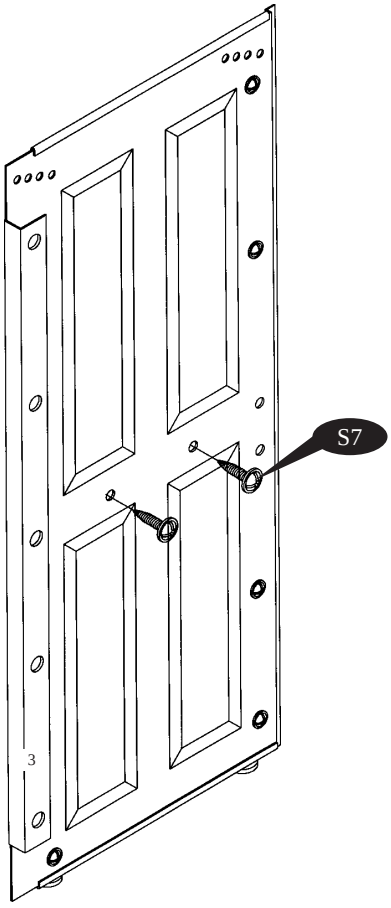

IMPORTANT: USE HAND GLOVES TO PREVENT INJURY.

15. Assemble to bottom slider (BS) to the Door panel bottom side at both edge with (S3) bolt and nut with washers.

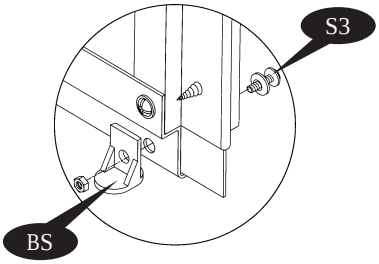

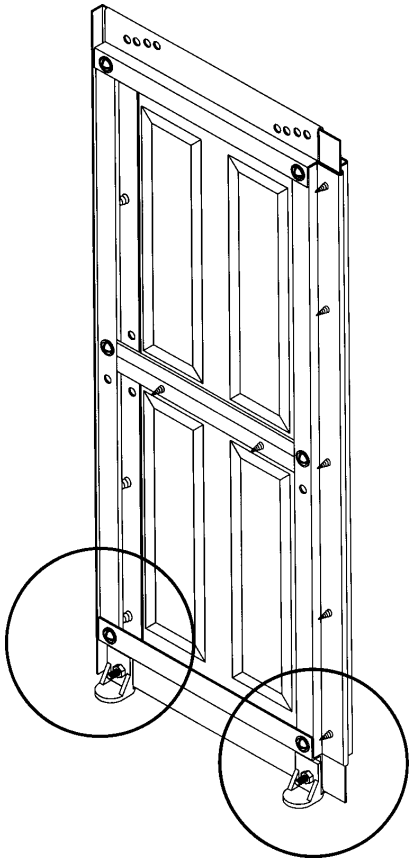

16. Fix the Door handle (DH) with Door panel from front side with bolt & nut.

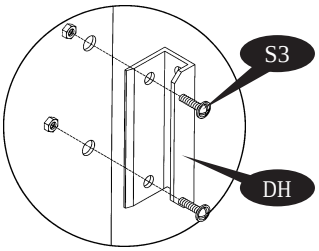

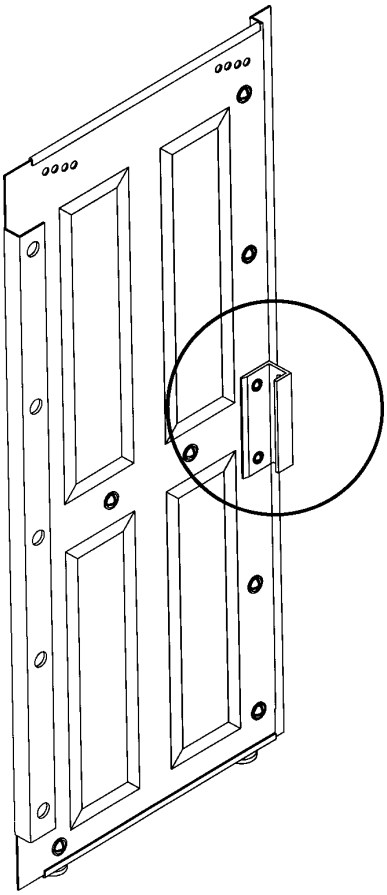

IMPORTANT: USE HAND GLOVES TO PREVENT INJURY.

17. Slide the Door panel assembly into the base bar front (BBFP). Make sure the bottom slider (BS) should slide inside the base bar front. See fig. 1.
Fix the Door panel top to the top slider (TS) with (S1) screws. See fig. 2 & 3.

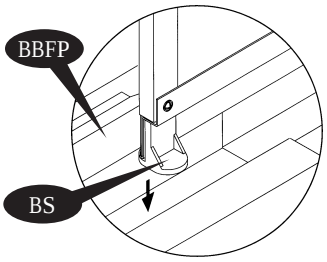

Fig.1

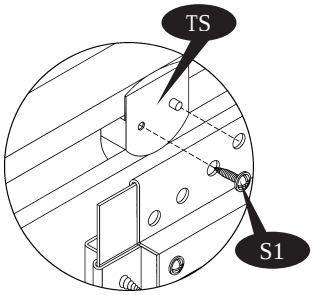

Fig.2

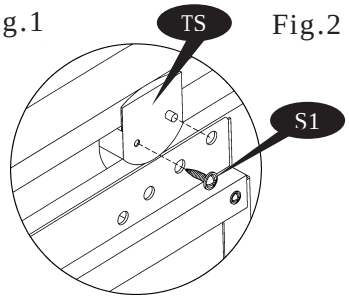

Fig.3

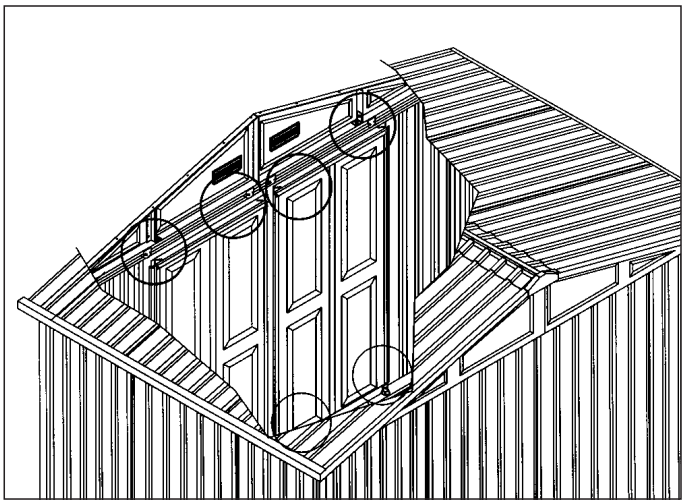

18 a. To get proper alignment of the Door re-align the holes with Door panel. See fig.

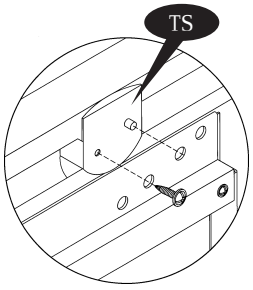

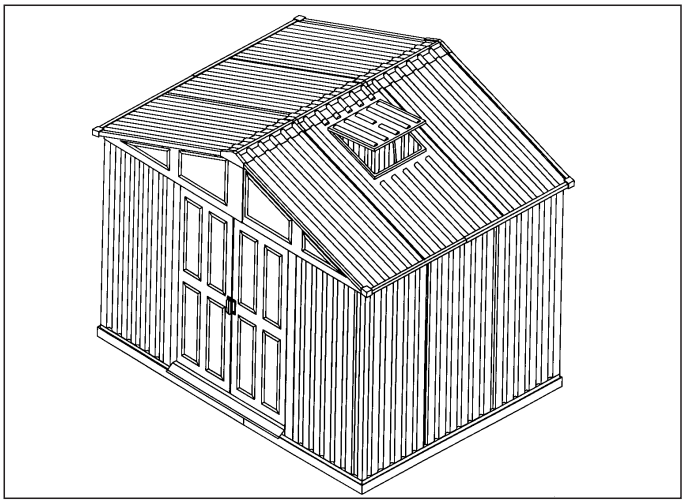

IMPORTANT

19. Fix the plastic screw cover (PC) to the screws and bolts edge from inside to prevent injury.

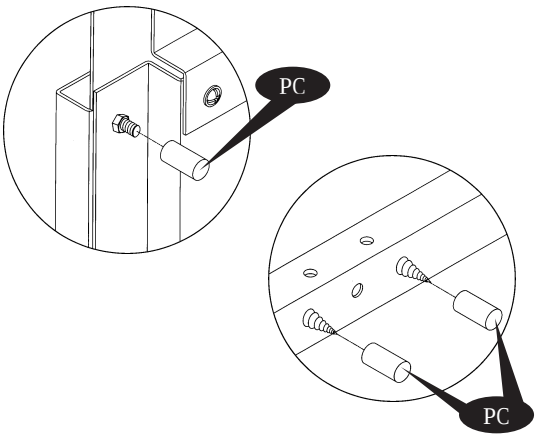

IMPORTANT: USE HAND GLOVES TO PREVENT INJURY.

20. Cut the Edging Profile (EDP) to the required length and insert to the Sliding Channel joint (SJP) to prevent injury. See fig.

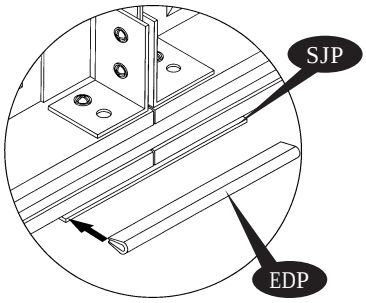

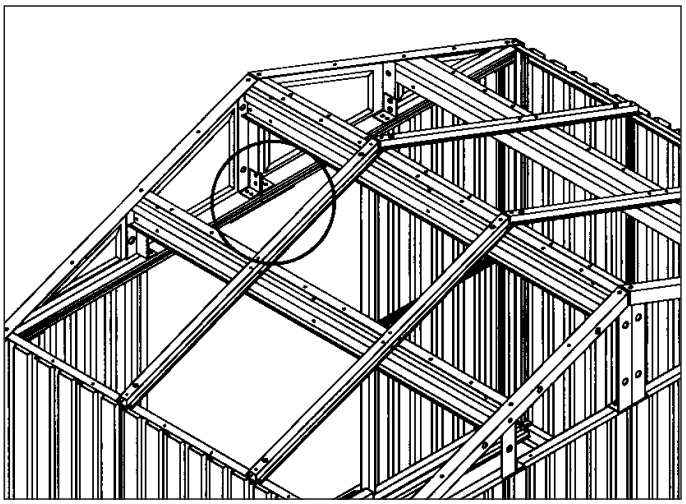

21. Cut the Edging Profile (EDP) to the required length and insert to the Facia Bracket Support (FBS) to prevent injury. See fig.

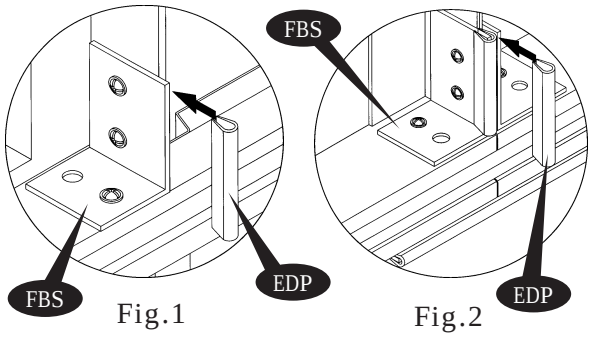

Fig.1 Fig.2

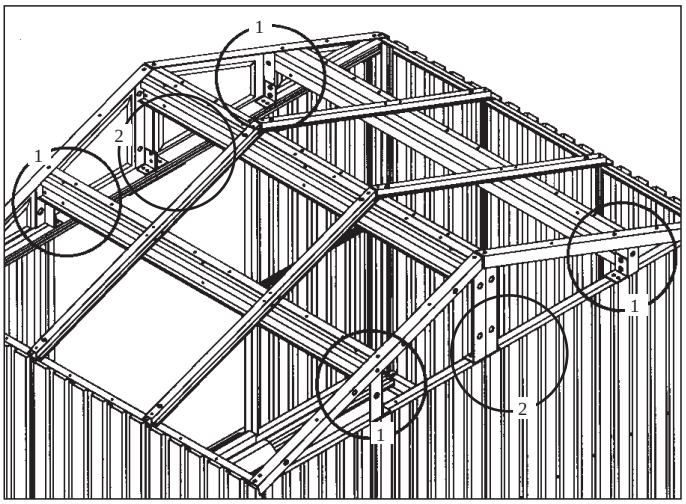

22. Cut the Edging Profile (EDP) to the required length and insert to the Support Bracket (SB3BP & SB4BP)to prevent injury. See fig.

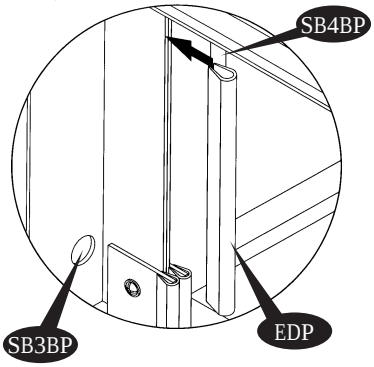

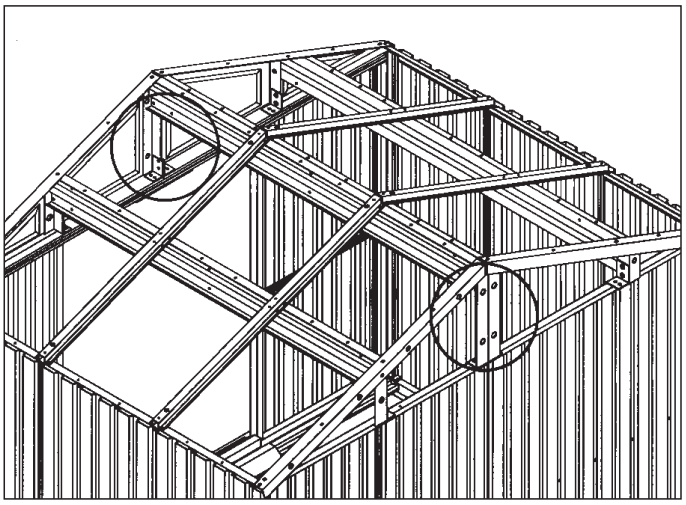

IMPORTANT: USE HAND GLOVES TO PREVENT INJURY.